ALC231
(P/N: ALC231-CG)

HIGH DEFINITION AUDIO CODEC WITH MONO CLASS-D SPEAKER AMPLIFIER

DATASHEET

Rev. 1.1
23 June 2011
Track ID: JATR-2265-11

Realtek Semiconductor Corp.
No. 2, Innovation Road II, Hsinchu Science Park, Hsinchu 300, Taiwan
Tel.: +886-3-578-0211. Fax: +886-3-577-6047
www.realtek.com

COPYRIGHT

©2011 Realtek Semiconductor Corp. All rights reserved. No part of this document may be reproduced, transmitted, transcribed, stored in a retrieval system, or translated into any language in any form or by any means without the written permission of Realtek Semiconductor Corp.

DISCLAIMER

Realtek provides this document "as is", without warranty of any kind. Realtek may make improvements and/or changes in this document or in the product described in this document at any time. This document could include technical inaccuracies or typographical errors.

TRADEMARKS

Realtek is a trademark of Realtek Semiconductor Corporation. Other names mentioned in this document are trademarks/registered trademarks of their respective owners.

USING THIS DOCUMENT

This document is intended for the hardware and software engineer's general information on the Realtek ALC231 IC.

Though every effort has been made to ensure that this document is current and accurate, more information may have become available subsequent to the production of this guide.

REVISION HISTORY

Revision	Release Date	Summary
1.0	2011/05/30	First release
1.1	2011/06/23	Revised section 11 Mechanical Dimensions, page 70.

Table of Contents

1. GENERAL DESCRIPTION 1

2. FEATURES 2

2.1. HARDWARE FEATURES 2
2.2. SOFTWARE FEATURES 4

3. SYSTEM APPLICATIONS 5

4. BLOCK DIAGRAM 6

4.1. ANALOG INPUT/OUTPUT UNIT 7

5. PIN ASSIGNMENTS 8

5.1. GREEN PACKAGE AND VERSION IDENTIFICATION 8

6. PIN DESCRIPTIONS 9

6.1. DIGITAL I/O PINS 9
6.2. ANALOG I/O PINS 9
6.3. FILTER/REFERENCE 10
6.4. POWER/GROUND 10

7. HIGH DEFINITION AUDIO LINK PROTOCOL 11

7.1. LINK SIGNALS 11
7.1.1. Signal Definitions 12
7.1.2. Signaling Topology 13
7.2. FRAME COMPOSITION 14
7.2.1. Outbound Frame – Single SDO 14
7.2.2. Inbound Frame – Single SDI 15
7.2.3. Variable Sample Rates 16
7.3. RESET AND INITIALIZATION 18
7.3.1. Link Reset 18
7.3.2. Codec Reset 19
7.3.3. Codec Initialization Sequence 20
7.4. VERB AND RESPONSE FORMAT 21
7.4.1. Command Verb Format 21
7.4.2. Response Format 21
7.4.3. Double Function Reset 22
7.5. POWER MANAGEMENT 22
7.5.1. ALC231 Additional Power Features 23

8. SUPPORTED VERBS AND PARAMETERS 24

8.1. VERB – GET PARAMETERS (VERB ID=F00H) 24
8.1.1. Parameter – Vendor ID (Verb ID=F00h, Parameter ID=00h) 24
8.1.2. Parameter – Revision ID (Verb ID=F00h, Parameter ID=02h) 24
8.1.3. Parameter – Subordinate Node Count (Verb ID=F00h, Parameter ID=04h) 25
8.1.4. Parameter – Function Group Type (Verb ID=F00h, Parameter ID=05h) 25
8.1.5. Parameter – Audio Function Capabilities (Verb ID=F00h, Parameter ID=08h) 25
8.1.6. Parameter – Audio Widget Capabilities (Verb ID=F00h, Parameter ID=09h) 26
8.1.7. Parameter – Supported PCM Size, Rates (Verb ID=F00h, Parameter ID=0Ah) 27
8.1.8. Parameter – Supported Stream Formats (Verb ID=F00h, Parameter ID=0Bh) 28
8.1.9. Parameter – Pin Capabilities (Verb ID=F00h, Parameter ID=0Ch) 28

8.1.10. Parameter – Amplifier Capabilities (Verb ID=F00h, Input Amplifier Parameter ID=0Dh) 29
8.1.11. Parameter – Amplifier Capabilities (Verb ID=F00h, Output Amplifier Parameter ID=12h) 29
8.1.12. Parameter – Connect List Length (Verb ID=F00h, Parameter ID=0Eh) 30
8.1.13. Parameter – Supported Power States (Verb ID=F00h, Parameter ID=0Fh) 30
8.1.14. Parameter – Processing Capabilities (Verb ID=F00h, Parameter ID=10h) 30
8.1.15. Parameter – GPIO Capabilities (Verb ID=F00h, Parameter ID=11h) 31
8.1.16. Parameter – Volume Knob Capabilities (Verb ID=F00h, Parameter ID=13h) 31
8.2. Verb – Get Connection Select Control (Verb ID=F01h) 32
8.3. Verb – Set Connection Select (Verb ID=701h) 32
8.4. Verb – Get Connection List Entry (Verb ID=F02h) 33
8.5. Verb – Get Processing State (Verb ID=F03h) 36
8.6. Verb – Set Processing State (Verb ID=703h) 36
8.7. Verb – Get Coefficient Index (Verb ID=Dh) 36
8.8. Verb – Set Coefficient Index (Verb ID=5h) 37
8.9. Verb – Get Processing Coefficient (Verb ID=Ch) 37
8.10. Verb – Set Processing Coefficient (Verb ID=4h) 37
8.11. Verb – Get Amplifier Gain (Verb ID=Bh) 38
8.12. Verb – Set Amplifier Gain (Verb ID=3h) 41
8.13. Verb – Get Converter Format (Verb ID=Ah) 42
8.14. Verb – Set Converter Format (Verb ID=2h) 43
8.15. Verb – Get Power State (Verb ID=F05h) 44
8.16. Verb – Set Power State (Verb ID=705h) 45
8.17. Verb – Get Converter Stream, Channel (Verb ID=F06h) 45
8.18. Verb – Set Converter Stream, Channel (Verb ID=706h) 46
8.19. Verb – Get Pin Widget Control (Verb ID=F07h) 46
8.20. Verb – Set Pin Widget Control (Verb ID=707h) 47
8.21. Verb – Get Unsolicited Response Control (Verb ID=F08h) 47
8.22. Verb – Set Unsolicited Response Control (Verb ID=708h) 48
8.23. Verb – Get Pin Sense (Verb ID=F09h) 48
8.24. Verb – Execute Pin Sense (Verb ID=709h) 49
8.25. Verb – Get Configuration Default (Verb ID=F1Ch) 49
8.26. Verb – Set Configuration Default Bytes 0, 1, 2, 3 (Verb ID=71Ch/71Dh/71Eh/71Fh for Bytes 0, 1, 2, 3) .50
8.27. Verb – Get BEEP Generator (Verb ID=F0Ah) 51
8.28. Verb – Set BEEP Generator (Verb ID=70Ah) 51
8.29. Verb – Get GPIO Data (Verb ID=F15h) 52
8.30. Verb – Set GPIO Data (Verb ID=715h) 52
8.31. Verb – Get GPIO Enable Mask (Verb ID=F16h) 53
8.32. Verb – Set GPIO Enable Mask (Verb ID=716h) 53
8.33. Verb – Get GPIO Direction (Verb ID=F17h) 54
8.34. Verb – Set GPIO Direction (Verb ID=717h) 54
8.35. Verb – Get GPIO Wake Enable Mask(Verb ID=F18h) 55
8.36. Verb – Set GPIO Wake Enable Mask (Verb ID=718h) 55
8.37. Verb – Get GPIO Unsolicited Response Enable Mask (Verb ID=F19h) 56
8.38. Verb – Set GPIO Unsolicited Response Enable Mask (Verb ID=719h) 56
8.39. Verb – Function Reset (Verb ID=7FFh) 57
8.40. Verb – Get Digital Converter Control 1 & Control 2 (Verb ID=F0Dh, F0Eh) 57
8.41. Verb – Set Digital Converter Control 1 & Control 2 (Verb ID=70Dh, 70Eh) 58
8.42. Verb – Get Subsystem ID [31:0] (Verb ID=F20h/F21h/F22h/F23h) 59
8.43. Verb – Set Subsystem ID [31:0] (Verb ID=723h for [31:24], 722h for [23:16], 721h for [15:8], 720h for [7:0]) 59
8.44. Verb – Get EAPD Control (Verb ID=F0Ch for Get) 60
8.45. Verb – Set EAPD Control (Verb ID=70Ch for Set) 60

9. ELECTRICAL CHARACTERISTICS 61

9.1. DC CHARACTERISTICS 61
9.1.1. Absolute Maximum Ratings 61
9.1.2. Threshold Voltage 61
9.1.3. Digital Filter Characteristics 62
9.1.4. SPDIF Output Characteristics 62
9.2. AC CHARACTERISTICS 63
9.2.1. Link Reset and Initialization Timing 63
9.2.2. Link Timing Parameters at the Codec 64
9.2.3. SPDIF Output Timing 65
9.3. ANALOG PERFORMANCE 66
9.4. CLASS-D POWER AMPLIFIER PERFORMANCE 67

10. APPLICATION CIRCUITS 68

10.1. FILTER CONNECTION 68
10.2. POWER AND JACK CONNECTION 69
10.3. SPDIF-OUT CONNECTION 69

11. MECHANICAL DIMENSIONS 70

12. ORDERING INFORMATION 71

List of Tables

Table 1. Digital I/O Pins 9
Table 2. Analog I/O Pins 9
Table 3. Filter/Reference 10
Table 4. Power/Ground 10
Table 5. Link Signal Definitions 12
Table 6. HDA Signal Definitions 12
Table 7. Defined Sample Rate and Transmission Rate 16
Table 8. 48kHz Variable Rate of Delivery Timing 16
Table 9. 44.1kHz Variable Rate of Delivery Timing 17
Table 10. 40-Bit Commands in 4-Bit Verb Format 21
Table 11. 40-Bit Commands in 12-Bit Verb Format 21
Table 12. Solicited Response Format 21
Table 13. Unsolicited Response Format 21
Table 14. System Power State Definitions 22
Table 15. Power Controls in NID=01h 22
Table 16. Powered Down Conditions 23
Table 17. Verb – Get Parameters (Verb ID=F00h) 24
Table 18. Parameter – Vendor ID (Verb ID=F00h, Parameter ID=00h) 24
Table 19. Parameter – Revision ID (Verb ID=F00h, Parameter ID=02h) 24
Table 20. Parameter – Subordinate Node Count (Verb ID=F00h, Parameter ID=04h) 25
Table 21. Parameter – Function Group Type (Verb ID=F00h, Parameter ID=05h) 25
Table 22. Parameter – Audio Function Capabilities (Verb ID=F00h, Parameter ID=08h) 25
Table 23. Parameter – Audio Widget Capabilities (Verb ID=F00h, Parameter ID=09h) 26
Table 24. Parameter – Supported PCM Size, Rates (Verb ID=F00h, Parameter ID=0Ah) 27
Table 25. Parameter – Supported Stream Formats (Verb ID=F00h, Parameter ID=0Bh) 28
Table 26. Parameter – Pin Capabilities (Verb ID=F00h, Parameter ID=0Ch) 28
Table 27. Parameter – Amplifier Capabilities (Verb ID=F00h, Input Amplifier Parameter ID=0Dh) 29
Table 28. Parameter – Amplifier Capabilities (Verb ID=F00h, Output Amplifier Parameter ID=12h) 29
Table 29. Parameter – Connect List Length (Verb ID=F00h, Parameter ID=0Eh) 30
Table 30. Parameter – Supported Power States (Verb ID=F00h, Parameter ID=0Fh) 30
Table 31. Parameter – Processing Capabilities (Verb ID=F00h, Parameter ID=10h) 30
Table 32. Parameter – GPIO Capabilities (Verb ID=F00h, Parameter ID=11h) 31
Table 33. Parameter – Volume Knob Capabilities (Verb ID=F00h, Parameter ID=13h) 31
Table 34. Verb – Get Connection Select Control (Verb ID=F01h) 32
Table 35. Verb – Set Connection Select (Verb ID=701h) 32
Table 36. Verb – Get Connection List Entry (Verb ID=F02h) 33
Table 37. Verb – Get Processing State (Verb ID=F03h) 36
Table 38. Verb – Set Processing State (Verb ID=703h) 36
Table 39. Verb – Get Coefficient Index (Verb ID=Dh) 36
Table 40. Verb – Set Coefficient Index (Verb ID=5h) 37
Table 41. Verb – Get Processing Coefficient (Verb ID=Ch) 37
Table 42. Verb – Set Processing Coefficient (Verb ID=4h) 37
Table 43. Verb – Get Amplifier Gain (Verb ID=Bh) 38
Table 44. Verb – Set Amplifier Gain (Verb ID=3h) 41
Table 45. Verb – Get Converter Format (Verb ID=Ah) 42
Table 46. Verb – Set Converter Format (Verb ID=2h) 43
Table 47. Verb – Get Power State (Verb ID=F05h) 44
Table 48. Verb – Set Power State (Verb ID=705h) 45
Table 49. Verb – Get Converter Stream, Channel (Verb ID=F06h) 45
Table 50. Verb – Set Converter Stream, Channel (Verb ID=706h) 46
Table 51. Verb – Get Pin Widget Control (Verb ID=F07h) 46

Table 52. Verb – Set Pin Widget Control (Verb ID=707h) 47
Table 53. Verb – Get Unsolicited Response Control (Verb ID=F08h) 47
Table 54. Verb – Set Unsolicited Response Control (Verb ID=708h) 48
Table 55. Verb – Get Pin Sense (Verb ID=F09h) 48
Table 56. Verb – Execute Pin Sense (Verb ID=709h) 49
Table 57. Verb – Get Configuration Default (Verb ID=F1Ch) 49
Table 58. Default Configuration for Each Pin Widget 50
Table 59. Verb – Set Configuration Default Bytes 0, 1, 2, 3 (Verb ID=71Ch/71Dh/71Eh/71Fh for Bytes 0, 1, 2, 3) 50
Table 60. Verb – Get BEEP Generator (Verb ID=F0Ah) 51
Table 61. Verb – Set BEEP Generator (Verb ID=70Ah) 51
Table 62. Verb – Get GPIO Data (Verb ID=F15h) 52
Table 63. Verb – Set GPIO Data (Verb ID=715h) 52
Table 64. Verb – Get GPIO Enable Mask (Verb ID=F16h) 53
Table 65. Verb – Set GPIO Enable Mask (Verb ID=716h) 53
Table 66. Verb – Get GPIO Direction (Verb ID=F17h) 54
Table 67. Verb – Set GPIO Direction (Verb ID=717h) 54
Table 68. Verb – Get GPIO Wake Enable Mask (Verb ID=F18h) 55
Table 69. Verb – Set GPIO Wake Enable Mask (Verb ID=718h) 55
Table 70. Verb – Get GPIO Unsolicited Response Enable Mask (Verb ID=F19h) 56
Table 71. Verb – Set GPIO Unsolicited Response Enable Mask (Verb ID=719h) 56
Table 72. Verb – Function Reset (Verb ID=7FFh) 57
Table 73. Verb –Get Digital Converter Control 1 & Control 2 (Verb ID=F0Dh, F0Eh) 57
Table 74. Verb – Set Digital Converter Control 1 & Control 2 (Verb ID=70Dh, 70Eh) 58
Table 75. Verb – Get Subsystem ID [31:0] (Verb ID=F20h/F21h/F22h/F23h) 59
Table 76. Verb – Set Subsystem ID [31:0] (Verb ID=723h for [31:24], 722h for [23:16], 721h for [15:8], 720h for [7:0]) 59
Table 77. Verb – Get EAPD Control (Verb ID=F0Ch) 60
Table 78. Verb – Set EAPD Control (Verb ID=70Ch for Set) 60
Table 79. Absolute Maximum Ratings 61
Table 80. Threshold Voltage 61
Table 81. Digital Filter Characteristics 62
Table 82. SPDIF Output Characteristics 62
Table 83. Link Reset and Initialization Timing 63
Table 84. Link Timing Parameters at the Codec 64
Table 85. SPDIF Output Timing 65
Table 86. Analog Performance 66
Table 87. Class-D Power Amplifier Performance 67
Table 88. Ordering Information 71

List of Figures

FIGURE 1. BLOCK DIAGRAM 6
FIGURE 2. ANALOG INPUT/OUTPUT UNIT 7
FIGURE 3. PIN ASSIGNMENTS 8
FIGURE 4. HDA LINK PROTOCOL 11
FIGURE 5. BIT TIMING 12
FIGURE 6. SIGNALING TOPOLOGY 13
FIGURE 7. SDO OUTBOUND FRAME 14
FIGURE 8. SDO STREAM TAG IS INDICATED IN SYNC 14
FIGURE 9. SDI INBOUND STREAM 15
FIGURE 10. SDI STREAM TAG AND DATA 15
FIGURE 11. LINK RESET TIMING 19
FIGURE 12. CODEC INITIALIZATION SEQUENCE 20
FIGURE 13. LINK RESET AND INITIALIZATION TIMING 63
FIGURE 14. LINK SIGNALS TIMING 64
FIGURE 15. OUTPUT TIMING 65
FIGURE 16. FILTER CONNECTION 68
FIGURE 17. POWER AND JACK CONNECTION 69
FIGURE 18. SPDIF-OUT CONNECTION 69

1. General Description

The ALC231 is a High Definition Audio Codec that integrates a 4-channel DAC, 4-channel ADC, and a mono and filter-less Class-D Speaker Amplifier with 2Watt (rms) output power.

The 4-channel DAC and 4-channel ADC support two independent stereo sound outputs and two independent stereo inputs simultaneously; allowing multiple streaming playback and output for multimedia applications and voice communication.

The ALC231 supports stereo digital microphone channels (microphone array) with Acoustic Echo Cancellation (AEC), Beam Forming (BF), and Noise Suppression (NS) technology simultaneously, significantly improving voice quality for PC VoIP applications.

The ALC231 headphone amplifier can drive a 32Ω headphone load without external DC blocking capacitors, eliminating pop noise caused by these capacitors. In addition to the cap-free headphone output port (HP-OUT), the LINE-OUT port is also designed as a line-level output without the need for DC blocking capacitors, eliminating pop noise when connecting to external powered speakers.

The integrated mono Class-D amplifier directly drives a mini speaker with as low as 4Ω impedance. Its maximum output power is 2 Watts at 5V power supply. The built-in high-pass filter with configurable cut-off frequency can prevent speaker burn up caused by low-frequency sound. The Class-D amplifier output power can also be limited to prevent mini speaker damage.

The ALC231 has overcurrent and short circuit detection to protect the integrated Class-D amplifier and power system. The Class-D amplifier output will be automatically shut down when a connected speaker is disconnected or to prevent over-heating. As well as protection functions, the ALC231 features spread spectrum and slew rate control for the Class-D carrier frequency to reduce EMI radiation.

Support for 16/20/24-bit SPDIF output with up to 192kHz sample rate offers easy connection of PCs to consumer electronic products, or transport of digital audio output to a High Definition Media Interface (HDMI) transmitter.

The ALC231 supports host audio from Intel chipsets, and also from any other HDA compatible audio controller. With various software utilities like environment sound emulation, multiple-band and independent software equalizer, dynamic range compressor and expander, optional Dolby PCEE program, SRS TruSurround HD, SRS Premium Sound, Fortemedia SAM, Creative Host Audio, Synopsys Sonic Focus, DTS Surround Sensation | UltraPC, and DTS Connect licenses, the ALC231 offers high sound quality, providing an excellent entertainment package and game experience for PC users.

2. Features

2.1. Hardware Features

- Meets WLP (Windows Logo Program) requirements for Windows XP, Vista, and Windows 7
- Analog DAC outputs with 97dB Signal-to-Noise Ratio (A-weighting)
- Analog ADC inputs with over 90dB Signal-to-Noise Ratio (A-weighting)
- 4-channel DAC supports 16/20/24-bit PCM format for independent two stereo channel playback
- 4-channel ADC supports 16/20/24-bit PCM format for independent two stereo channel recording
- All DACs support 44.1k/48k/96k/192kHz sample rate
- All ADCs support 44.1k/48k/96k/192kHz sample rate
- SPDIF-OUT supports 16/20/24-bit format and 44.1/48/88.2/96/192kHz sample rate
- Six stereo analog IO ports: LINE-OUT (output), MIC1 (input and output), MIC2 (input), LINE1 (input and output), LINE2 (input and output), and HP-OUT (output)
- One mono port with Class-D Amplifier to driver mini speaker: MONO-OUT
- One stereo digital microphone input
- Supports external PCBEEP input and built-in digital BEEP generator
- Built in headphone amplifiers at port LINE1 and HP-OUT
- Headphone amplifier at port HP-OUT does not require DC blocking capacitors
- Port LINE-OUT is stereo output without DC blocking capacitors
- Software selectable 2.3V/3.0V/4.0V VREFOUT as bias voltage for analog microphone input
- Programmable +12/+24/+36dB boost gain for analog microphone input
- Programmable boost gain and volume control for digital microphone input
- Two jack detection pins; each can detect up to 4 jacks
- Supports 4-pole type headset combo jack (stereo headphone output and mono microphone input on a single jack)
- Enhanced power management features for normal operation and standby mode

- Mono Bridge-Tied Load Class-D amplifier at port-H (MONO-OUT) has 2Watt (rms) power for 4Ω load speaker
- Short circuit and over current protection for Class-D amplifier
- Class-D amplifier has high pass filter with selectable Cut-Off frequency to prevent low frequency signal damaging speaker
- Class-D amplifier output with slew rate and spread spectrum control to reduce EMI radiation
- Intel low power ECR HDA015-B compliant: supports power status control, jack detection, and wake-up event in D3 mode
- Two GPIOs for customized applications
- EAPD (External Amplifier Power Down) is supported
- Supports anti-pop mode when analog power AVDD is on and digital power is off
- PCBEEP pass through to MONO-OUT port (Class-D amplifier) in anti-pop mode
- Built-in 5V-to-4.5V LDO to power analog circuitry
- Power support: 3.3V digital core power; 1.5V~3.3V digital IO power for HDA link; 4.5V~5.5V analog power; 4.5V~5.5V power stage voltage
- 48-pin QFN 'Green' package

2.2. Software Features

- Meets WLP (Windows Logo Program) requirements for Windows XP, Vista, and Windows 7
- Supports Linux driver based on kernel 2.6.0 and later version
- EAX 1.0 & 2.0 compatible
- Direct Sound 3D compatible
- I3DL2 compatible
- HRTF 3D Positional Audio (Windows XP only)
- Multi-band software equalizer and dynamic range control (expander, compressor, and limiter) with adjustable parameters
- Intuitive Configuration Panel (Realtek Audio Manager) to enhance user experience
- Enhanced Microphone Acoustic Echo Cancellation (AEC), Noise Suppression (NS), and Beam Forming (BF) technology for voice application
- HDMI audio driver for Intel and AMD chipsets
- Optional Dolby PCEE program, SRS TruSurround HD, SRS Premium Sound, Fortemedia SAM, Creative Host Audio, Synopsys Sonic Focus, DTS Surround Sensation | UltraPC, and DTS Connect licenses

3. System Applications

- Commercial desktop and notebook PCs
- Tablet PC, netbook, and MID (Mobile Internet Device) with High Definition Audio Controller

4. Block Diagram

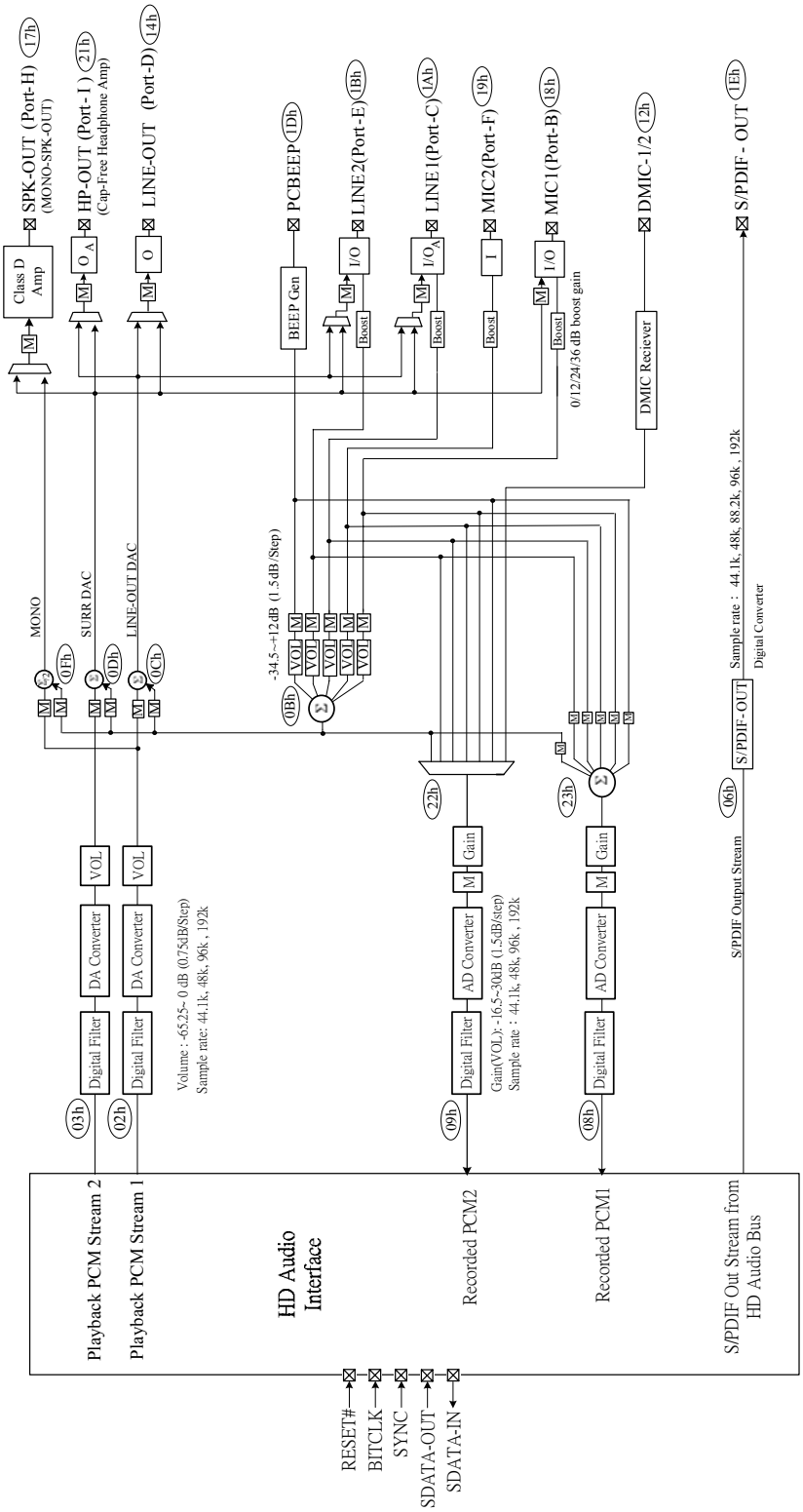

Figure 1. Block Diagram

4.1. Analog Input/Output Unit

Pin widgets NID=18h, 1Ah, and 1Bh are re-tasking IO supporting input units. NID=1Ah (Port-C, LINE1) and 21h (Port-I, HP-OUT) support amplifier units.

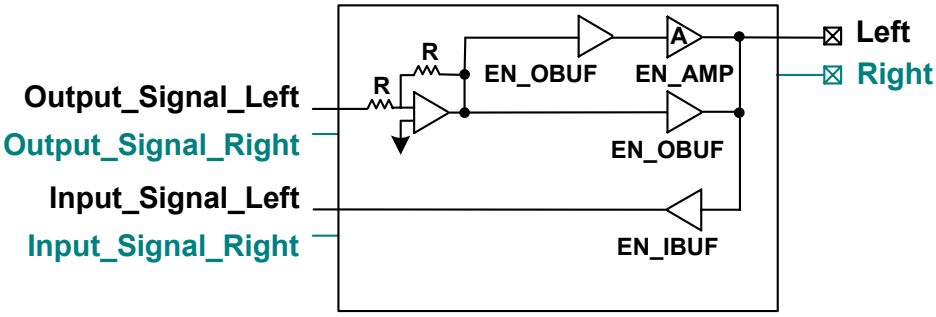

Figure 2. Analog Input/Output Unit

5. Pin Assignments

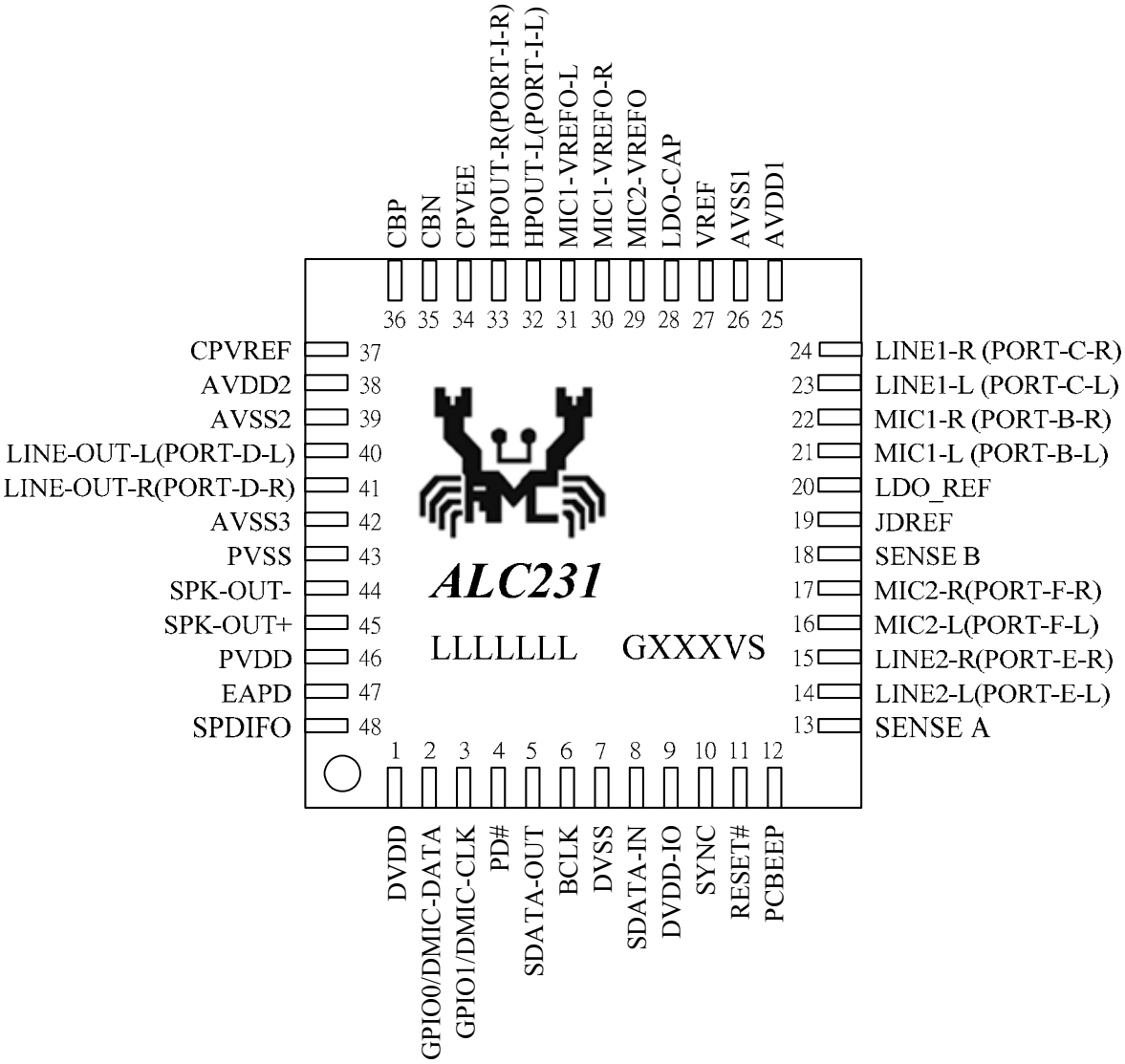

Figure 3. Pin Assignments

5.1. Green Package and Version Identification

Green package is indicated by the 'G' in GXXXVS (Figure 3). The silicon version and step numbers are shown in the location marked 'V' and 'S'.

6. Pin Descriptions

6.1. Digital I/O Pins

Table 1. Digital I/O Pins

Name	Type	Pin	Description	Characteristic Definition
RESET#	I	11	H/W Reset Control	Input, V_T=0.20*(DVDD-IO)
SYNC	I	10	Sample Sync (48kHz)	Schmitt Trigger Input V_{OL}=0.33*(DVDD-IO), V_{OH}=0.66*(DVDD-IO)
BCLK	I	6	24MHz Bit Clock Input	Schmitt Trigger Input V_{OL}=0.33*(DVDD-IO), V_{OH}=0.66*(DVDD-IO)
SDATA-OUT	I	5	Serial TDM Data Input	Input, V_T=0.5*(DVDD-IO)
SDATA-IN	O	8	Serial TDM Data Output	Output, V_{OL}=0.1*(DVDD-IO), V_{OH}=0.9*(DVDD=IO)
EAPD	O	47	Signal to Power Down External Amplifier	Output, V_{OL}=0V, V_{OH}=DVDD
SPDIFO	O	48	SPDIF Output	Output with 12 mA@75Ω driving capability (Internally pulled low by a 47K resistor)
GPIO1/ DMIC-CLK	IO	3	General Purpose Input/Output 1 Clock Output for Digital MIC	Input/Output; Shared with the digital MIC clock Input V_T=(2/3)*DVDD, internal pull high to DVDD by 47k ohm Output V_{OH}=DVDD, V_{OL}=DVSS, Default GPIO
GPIO0/ DMIC-DATA	IO	2	General Purpose Input/Output 0 Data Input from Digital MIC	Input/Output; Shared with the digital MIC input data Input V_T=(2/3)*DVDD, internal pull high to DVDD by 47k ohm Output V_{OH}=DVDD, V_{OL}=DVSS, default GPIO
				Total: 9 pins

6.2. Analog I/O Pins

Table 2. Analog I/O Pins

Name	Type	Pin	Description	Characteristic Definition
PCBEEP	I	12	External PCBEEP Input	Analog input, 1.6Vrms of full-scale input
LINE2-L	IO	14	2nd Line Input Left Channel	Analog input/output, default is input (Port-E)
LINE2-R	IO	15	2nd Line Input Right Channel	Analog input/output, default is input (Port-E)
MIC2-L	I	16	2nd Stereo Microphone Input Left Channel	Analog input (Port-F)
MIC2-R	I	17	2nd Stereo Microphone Input Right Channel	Analog input (Port-F)
MIC1-L	IO	21	1st Stereo Microphone Input Left Channel	Analog input/output, default is input (Port-B)
MIC1-R	IO	22	1st Stereo Microphone Input Right Channel	Analog input/output, default is input (Port-B)
LINE1-L	IO	23	1st Line Input Left Channel	Analog input/output, default is input (Port-C)
LINE1-R	IO	24	1st Line Input Right Channel	Analog input/output, default is input (Port-C)
HP-OUT-L	O	32	Cap-Free Headphone Output Left Channel	Analog output (PORT-)
HP-OUT-R	O	33	Cap-Free Headphone Output Right Channel	Analog output (PORT-I)
LINE-OUT-L	O	40	Cap-Free Line Output Left Channel	Analog output (PORT-D)
LINE-OUT-R	O	41	Cap-Free Line Output Right Channel	Analog output (PORT-D)
SPK-OUT -	O	44	Mono SPK Amplifier Negative Output	Pulse width modulation output (Port-H)

Name	Type	Pin	Description	Characteristic Definition
SPK-OUT +	O	45	Mono SPK Amplifier Positive Output	Pulse width modulation output (Port-H)
Sense A	I	13	Jack Detect Pin 1	Resistor (5.1K, 10K, 20K, 39.2K) with 1% accuracy
Sense B	I	18	Jack Detect Pin 2	Resistor (5.1K, 10K, 20K, 39.2K) with 1% accuracy
PD#	I	4	Power Down Class-D Output Control	V_{IL}=1.25~1.45V/V_{IH}=1.80~2.00V (internally pull-high by a 400k resistor)
				Total: 18 pins

6.3. Filter/Reference

Table 3. Filter/Reference

Name	Type	Pin	Description	Characteristic Definition
JDREF	-	19	Reference Resistor for Jack Detect	20K, 1% accuracy resistor to analog ground
LDO_REF	-	20	2.5V Reference Voltage	10µF capacitor to analog ground
VREF	-	27	0.5*LDO_OUT of Reference Voltage	2.2µF capacitor to analog ground
LDO-CAP	-	28	LDO Output Reference for Integrated Regulator	10µF capacitor to analog ground
MIC2-VREFO	O	29	Bias Voltage for MIC2 Jack	2.3V/3.0V/4.0V reference voltage
MIC1-VREFO-R	O	30	Secondary Bias Voltage for MIC1 Jack	2.3V/3.0V/4.0V reference voltage
MIC1-VREFO-L	O	31	Bias Voltage for MIC1 Jack	2.3V/3.0V/4.0V reference voltage
CPVEE	-	34	Reference Voltage Output	2.2µF capacitor to analog ground
CPVREF	-	37	0V Reference Voltage	Analog ground
CBN	-	35	Reference Capacitor	2.2µF capacitor to CBP
CBP	-	36	Reference Capacitor	2.2µF capacitor to CBN
				Total: 11 pins

6.4. Power/Ground

Table 4. Power/Ground

Name	Type	Pin	Description	Characteristic Definition
AVDD1	P	25	Analog VDD (5.0V)	Analog power for mixer, DACs, and ADCs
AVSS1	G	26	Analog GND	Analog ground for mixer, DACs, and ADCs
AVDD2	P	38	Analog VDD (5.0V)	Analog power for charge pump circuit
AVSS2	G	39	Analog GND	Analog ground for charge pump circuit
AVSS3	G	42	Analog GND	Analog ground
DVDD	P	1	Digital Core Power (3.3V)	Digital core power for core logic
DVSS	G	7	Digital GND	Digital ground for core logic and HDA link
DVDD-IO	P	9	Digital IO Power (1.5V~3.3V)	Digital I/O power for HDA link
PVDD	P	46	Power Stage VDD 5.0V	Power supply for full-bridge Class-D Amp
PVSS	G	43	Power Stage GND	Ground for full-bridge Class-D Amp
Thermal Pad	G	49	Power Stage GND	Ground for full-bridge Class-D Amp
				Total: 11 pins

7. High Definition Audio Link Protocol

7.1. Link Signals

The High Definition Audio (HDA) Link is the digital serial interface that connects the HDA codecs to the HDA Controller. The HDA link protocol is controller synchronous, based on a 24.0MHz BIT-CLK sent by the HDA controller. The input and output streams, including command and PCM data, are isochronous with a 48kHz frame rate. Figure 4 shows the basic concept of the HDA link protocol.

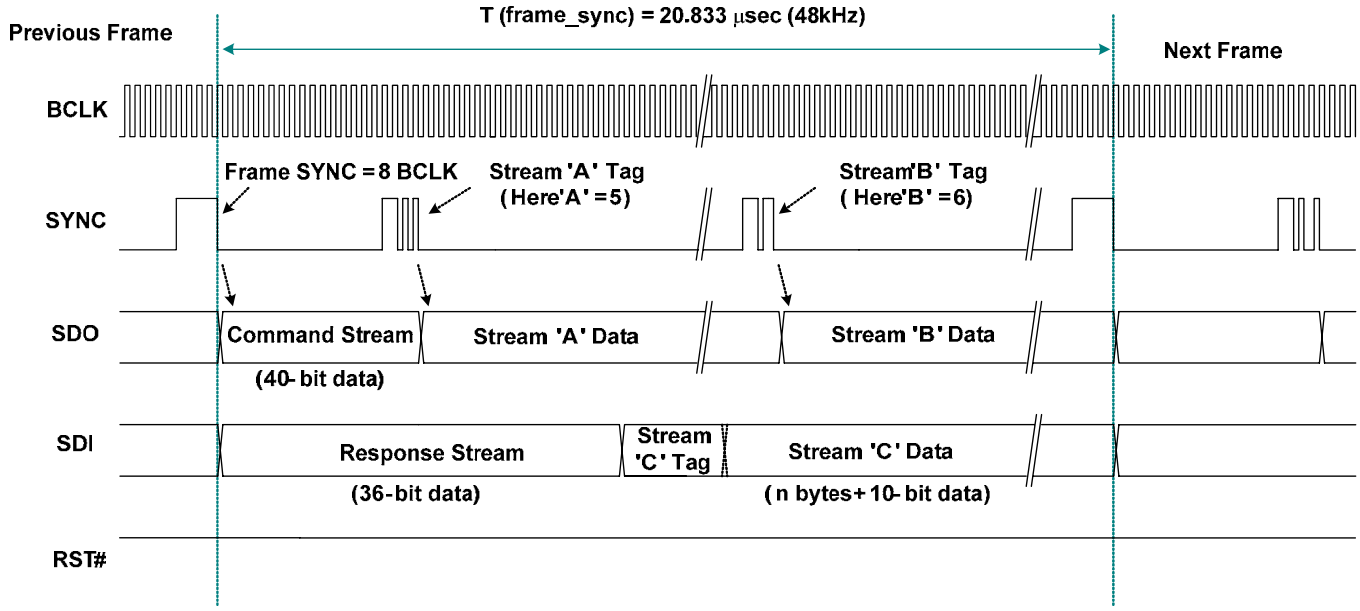

Figure 4. HDA Link Protocol

7.1.1. Signal Definitions

Table 5. Link Signal Definitions

Item	Description
BCLK	24.0MHz bit clock sourced from the HDA controller and connected to all codecs.
SYNC	48kHz signal used to synchronize input and output streams on the link. It is sourced from the HDA controller and connects to all codecs.
SDO	Serial Data Output signal driven by the HDA controller to all codecs. Commands and data streams are carried on SDO. The data rate is double pumped; the controller drives data onto the SDO, the codec samples data present on SDO with respect to each edge of BCLK. The HDA controller must support at least one SDO. To extend outbound bandwidth, multiple SDOs may be supported.
SDI	Serial Data Input signal driven by the codec. This is point-to-point serial data from the codec to the HDA controller. The controller must support at least one SDI, and up to a maximum of 15 SDI's can be supported. SDI is driven by the codec at each rising edge of BCLK, and sampled by the controller at each rising edge of BCLK. SDI can be driven by the controller to initialize the codec's ID.
RST#	Active low reset signal. Asserted to reset the codec to default power on state. RST# is sourced from the HDA controller and connects to all codecs.

Table 6. HDA Signal Definitions

Signal Name	Source	Controller Type	Description
BCLK	Controller	Output	Global 24.0MHz Bit Clock.
SYNC	Controller	Output	Global 48kHz Frame Sync and outbound tag signal.
SDO	Controller	Output	Serial Data Output from Controller.
SDI	Codec/Controller	Input/Output	Serial Data Input from codec. Weakly pulled down by the controller.
RST#	Controller	Output	Global Active Low Reset Signal.

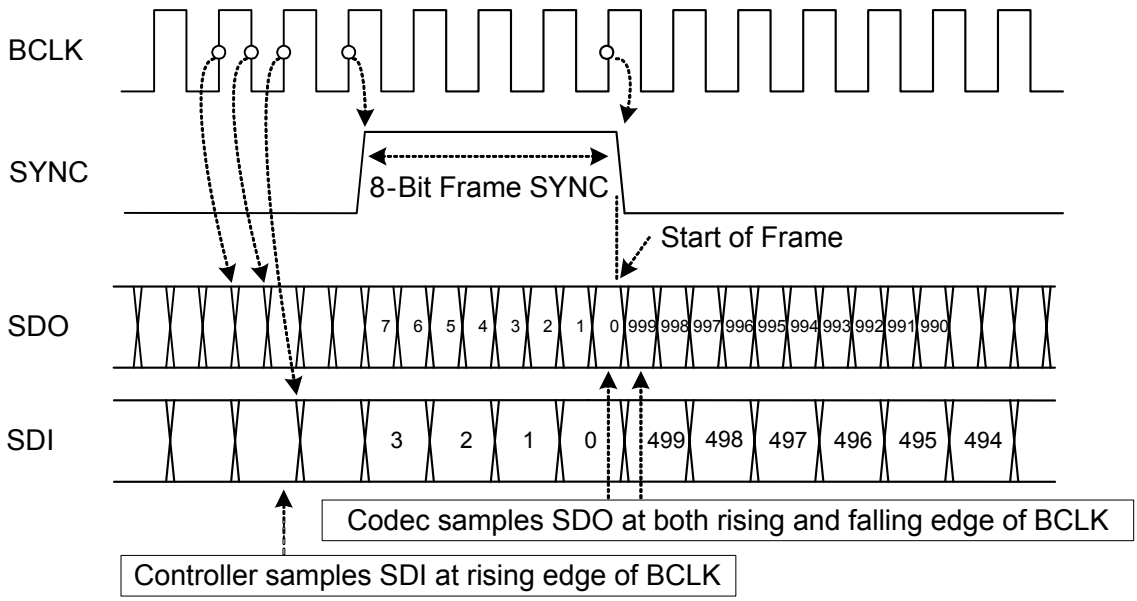

Figure 5. Bit Timing

7.1.2. Signaling Topology

The HDA controller supports two SDOs for the outbound stream, up to 15 SDIs for the inbound stream. RST#, BCLK, SYNC, SDO0, and SDO1 are driven by controller to codecs. Each codec drives its own point-to-point SDI signal(s) to the controller.

Figure 6 shows the possible connections between the HDA controller and codecs:

- Codec 0 is a basic connection. There is one single SDO and one single SDI for normal transmission
- Codec 1 has two SDOs for doubled outbound rate, a single SDI for normal inbound rate
- Codec 3 supports a single SDO for normal outbound rate, and two SDIs for doubled inbound rate
- Codec N has two SDOs and multiple SDIs

The multiple SDOs and multiple SDIs are used to expand the transmission rate between controller and codecs. Section 7.2 Frame Composition, page 14 describes the detailed outbound and inbound stream compositions for single and multiple SDOs/SDIs.

The connections shown in Figure 6 can be implemented concurrently in an HDA system. The ALC231 is designed to receive a single SDO stream.

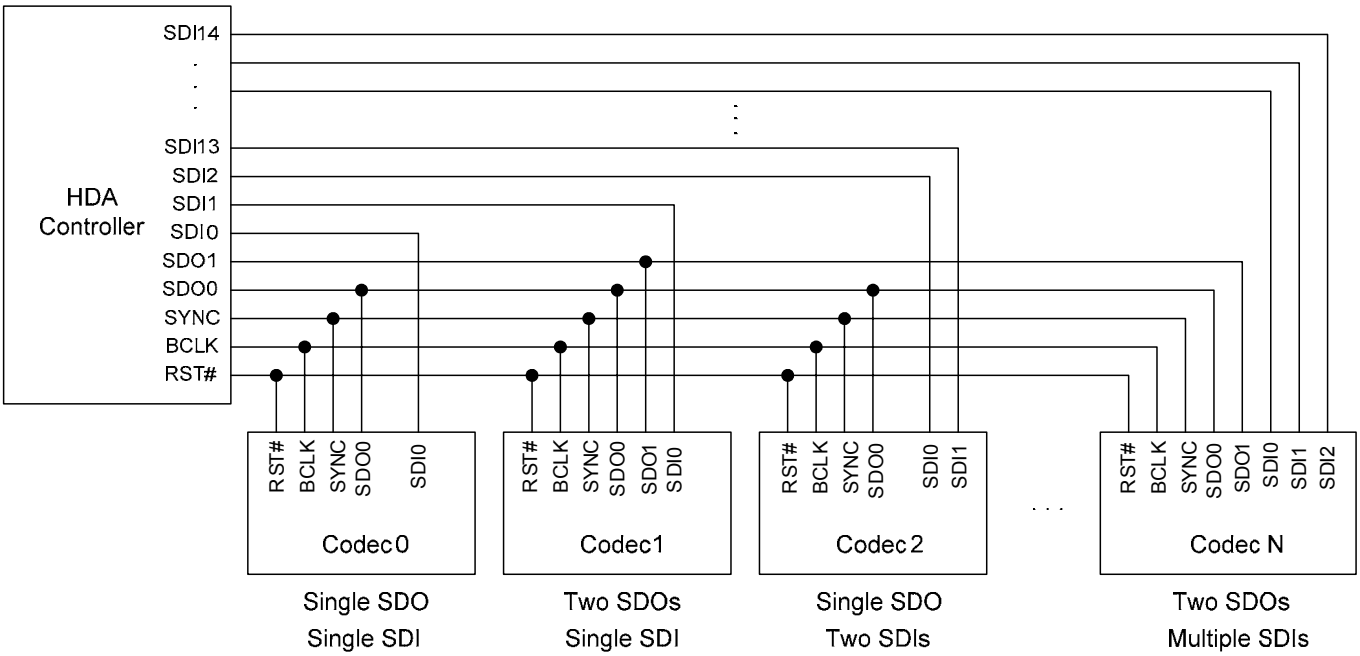

Figure 6. Signaling Topology

7.2. Frame Composition

7.2.1. Outbound Frame – Single SDO

An outbound frame is composed of one 32-Bit command stream and multiple data streams. There are one or multiple sample blocks in a data stream. Only one sample block exists in a stream if the HDA controller delivers a 48kHz rate of samples to the codec. Multiple sample blocks in a stream means the sample rate is a multiple of 48kHz. This means there should be 2 blocks in the same stream to carry 96kHz samples (Figure 7).

For outbound frames, the stream tag is not in SDO, but in the SYNC signal. A new data stream is started at the end of the stream tag. The stream tag includes a 4-Bit preamble and 4-Bit stream ID (Figure 8).

To keep the cadence of converters bound to the same stream, samples for these converters must be placed in the same block.

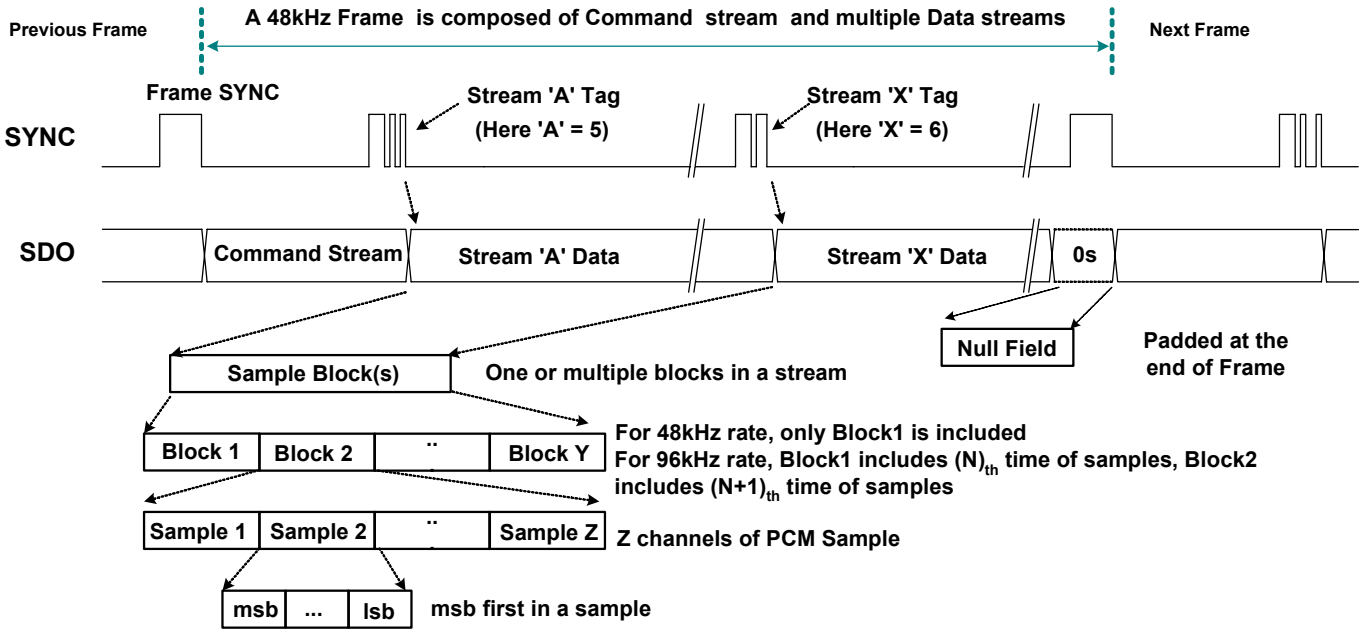

Figure 7. SDO Outbound Frame

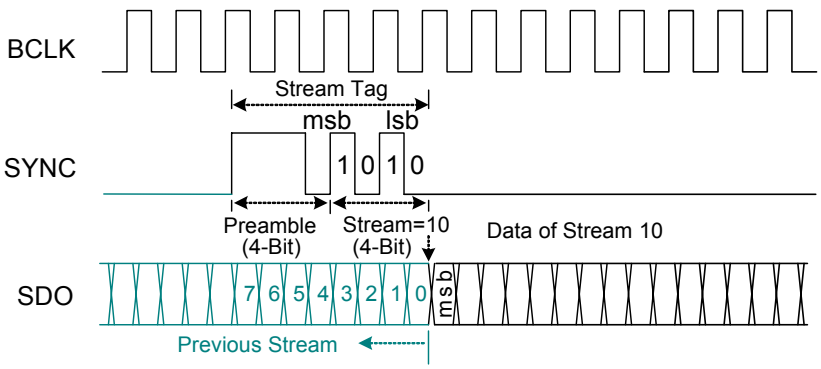

Figure 8. SDO Stream Tag is Indicated in SYNC

7.2.2. Inbound Frame – Single SDI

An Inbound Frame – Single SDI is composed of one 36-Bit response stream and multiple data streams. Except for the initialization sequence (turnaround and address frame), SDI is driven by the codec at each rising edge of BCLK. The controller also samples data at the rising edge of BCLK (Figure 9).

The SDI stream tag is not carried by SYNC, but included in the SDI. A complete SDI data stream includes one 4-Bit stream tag, one 6-Bit data length, and n-Bit sample blocks. Zeros will be padded if the total length of the contiguous sample blocks within a given stream is not of integral byte length (Figure 10).

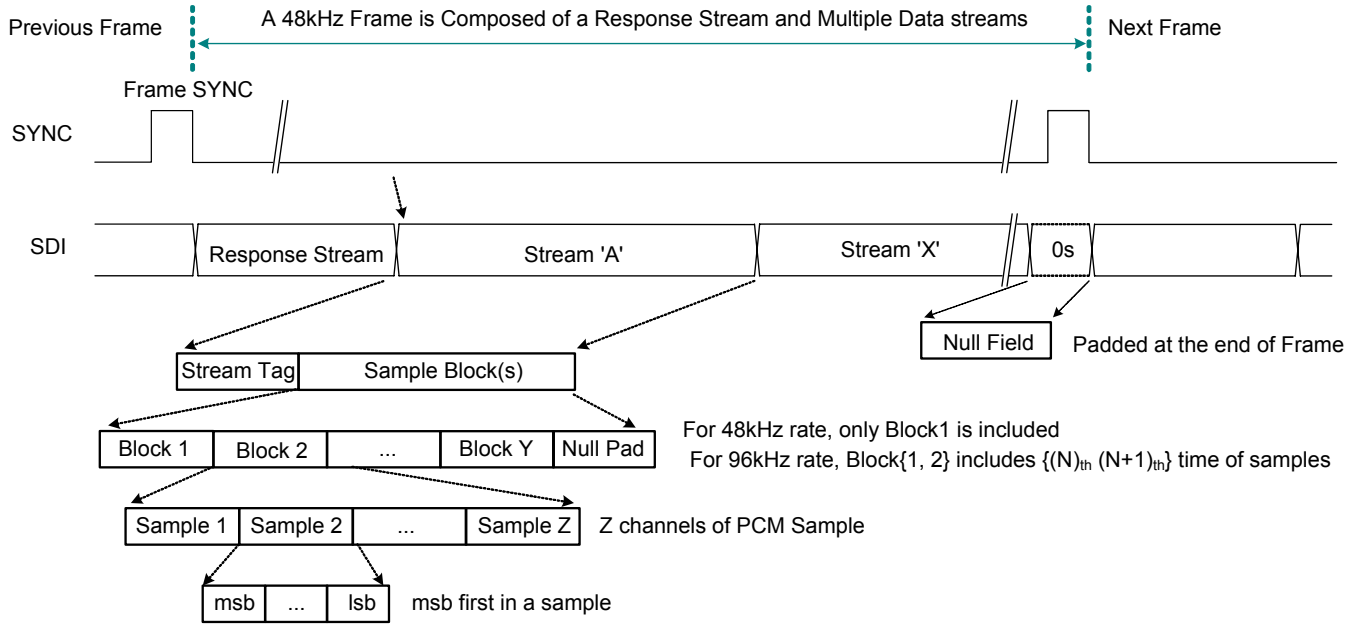

Figure 9. SDI Inbound Stream

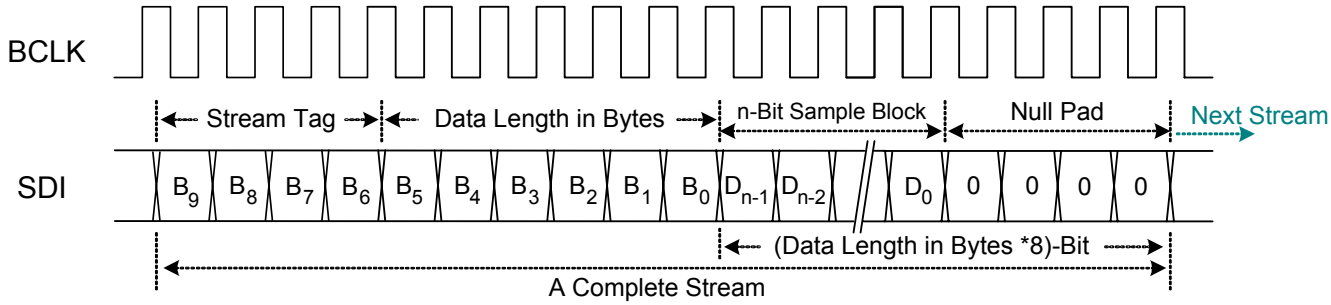

Figure 10. SDI Stream Tag and Data

7.2.3. Variable Sample Rates

The HDA link is designed for sample rates of 48kHz. Variable rates of sample are delivered in multiple or sub-multiple rates of 48kHz. Two sample blocks per frame result in a 96kHz delivery rate, one sample block over two frames results in a 24kHz delivery rate. The HDA specification states that the sample rate of the outbound stream be synchronized by the controller, not by the codec. Each stream has its own sample rate, independent of any other stream.

The HDA controller supports 48kHz and 44.1kHz base rates. Table 7 shows the recommended sample rates based on multiples or sub-multiples of one of the two base rates.
Rates in sub-multiples (1/n) of 48kHz are interleaving n frames containing no sample blocks. Rates in multiples (n) of 48kHz contain n sample blocks in a frame. Table 8 shows the delivery cadence of variable rates based on 48kHz.

The HDA link is defined to operate at a fixed 48kHz frame rate. To deliver samples in (sub) multiple rates of 44.1kHz, an appropriate ratio between 44.1kHz and 48kHz must be maintained to avoid frequency drift. The appropriate ratio between 44.1kHz and 48kHz is 147/160. Meaning 147 sample blocks are transmitted every 160 frames.

The cadence '12-11-11-12-11-11-12-11-11-12-11-11-11- (repeat)'interleaves 13 frames containing no sample blocks in every 160 frames. It provides a low long-term frequency drift for a 44.1kHz delivery rate. Rates in sub-multiples (1/n) of 44.1kHz also follow this cadence AND interleave n empty frames. Rates in multiples (n) of 44.1kHz applying this cadence contain n sample blocks in the non-empty frame AND interleave an empty frame between non-empty frames (Table 9, page 17).

Table 7. Defined Sample Rate and Transmission Rate

(Sub) Multiple	48kHz Base	44.1kHz Base
1/6	8kHz (1 sample block every 6 frames)	-
1/4	12kHz (1 sample block every 4 frames)	11.025kHz (1 sample block every 4 frames)
1/3	16kHz (1 sample block every 3 frames)	-
1/2	-	22.05kHz (1 sample block every 2 frames)
2/3	32kHz (2 sample blocks every 3 frames)	-
1	48kHz (1 sample block per frame)	44.1kHz (1 sample block per frame)
2	96kHz (2 sample blocks per frame)	88.2kHz (2 sample blocks per frame)
4	192kHz (4 sample blocks per frame)	176.4kHz (4 sample blocks per frame)

Table 8. 48kHz Variable Rate of Delivery Timing

Rate	Delivery Cadence	Description
8kHz	YNNNNN (repeat)	One sample block is transmitted in every 6 frames
12kHz	YNNN (repeat)	One sample block is transmitted in every 4 frames
16kHz	YNN (repeat)	One sample block is transmitted in every 3 frames
32kHz	Y^2NN (repeat)	One sample block is transmitted in every 6 frames
48kHz	Y (repeat)	One sample block is transmitted in every 6 frames
96kHz	Y^2 (repeat)	Two sample blocks are transmitted in each frame
192kHz	Y^4 (repeat)	Four sample blocks are transmitted in each frame

N: No sample block in a frame. *Y: One sample block in a frame.* *Yx: X sample blocks in a frame.*

Table 9. 44.1kHz Variable Rate of Delivery Timing

Rate	Delivery Cadence
11.025kHz	{12}{-}{11}{-}{11}{-}{12}{-}{11}{-}{11}{-}{12}{-}{11}{-}{11}{-}{12}{-}{11}{-}{11}{-}{11}{-} (repeat)
22.05kHz	{12}{-}{11}{-}{11}{-}{12}{-}{11}{-}{11}{-}{12}{-}{11}{-}{11}{-}{12}{-}{11}{-}{11}{-}{11}{-} (repeat)
44.1kHz	12-11-11-12-11-11-12-11-11-12-11-11-11- (repeat)
88.2kHz	12^2-11^2-11^2-12^2-11^2-11^2-12^2-11^2-11^2-12^2-11^2-11^2-11^2- (repeat)
176.4kHz	12^4-11^4-11^4-12^4-11^4-11^4-12^4-11^4-11^4-12^4-11^4-11^4-11^4- (repeat)

11.025kHz: {12}=YNNNYNNNYNNNYNNNYNNNYNNNYNNNYNNNYNNNYNNNYNNNYNNNYNNN
{11}=YNNNYNNNYNNNYNNNYNNNYNNNYNNNYNNNYNNNYNNNYNNN
{ - }=NNNN

22.050kHz: {12}=YNYNYNYNYNYNYNYNYNYNYNYN
{11}=YNYNYNYNYNYNYNYNYNYN
{ - }=NN

44.1kHz: 12- =Contiguous 12 frames containing 1 sample blocks each, followed by one frame with no sample block.

88.2kHz: 12^2- =Contiguous 12 frames containing 2 sample blocks each, followed by one frame with no sample block.

176.4kHz: 12^4- =Contiguous 12 frames containing 4 sample blocks each, followed by one frame with no sample block.

7.3. Reset and Initialization

There are two types of reset within an HDA link:

- Link Reset. Generated by assertion of the RST# signal. All codecs return to their power on state
- Codec Reset. Generated by software directing a command to reset a specific codec back to its default state

An initialization sequence is requested after any of the following three events:

1. Link Reset

2. Codec Reset

3. Codec changes its power state (For example, hot docking a codec to an HDA system)

7.3.1. Link Reset

A link reset may be caused by 3 events:

1. The HDA controller asserts RST# for any reason (power up, or PCI reset)

2. Software initiates a link reset via the 'CRST' bit in the Global Control Register (GCR) of the HDA controller

3. Software initiates power management sequences. Figure 11, page 19, shows the 'Link Reset' timing including the 'Enter' sequence (❶~❺) and 'Exit' sequence (❻~❾)

Enter 'Link Reset':

❶ Software writes a 0 to the 'CRST' bit in the Global Control Register of the HDA controller to initiate a link reset

❷ As the controller completes the current frame, it does not signal the normal 8-Bit frame SYNC at the end of the frame

❸ The controller drives SYNC and all SDOs to low. Codecs also drive SDIs to low

❹ The controller asserts the RST# signal to low, and enters the 'Link Reset' state

❺ All link signals driven by controller and codecs should be tri-state by internal pull low resistors

Exit from 'Link Reset':

❻ If BCLK is re-started for any reason (codec wake-up event, power management, etc.)

❼ Software is responsible for de-asserting RST# after a minimum of 100µsec BCLK running time (the 100µsec provides time for the codec PLL to stabilize)

❽ Minimum of 4 BCLK after RST# is de-asserted, the controller starts to signal normal frame SYNC

❾ When the codec drives its SDI to request an initialization sequence (when the SDI is driven high at the last bit of frame SYNC, it means the codec requests an initialization sequence)

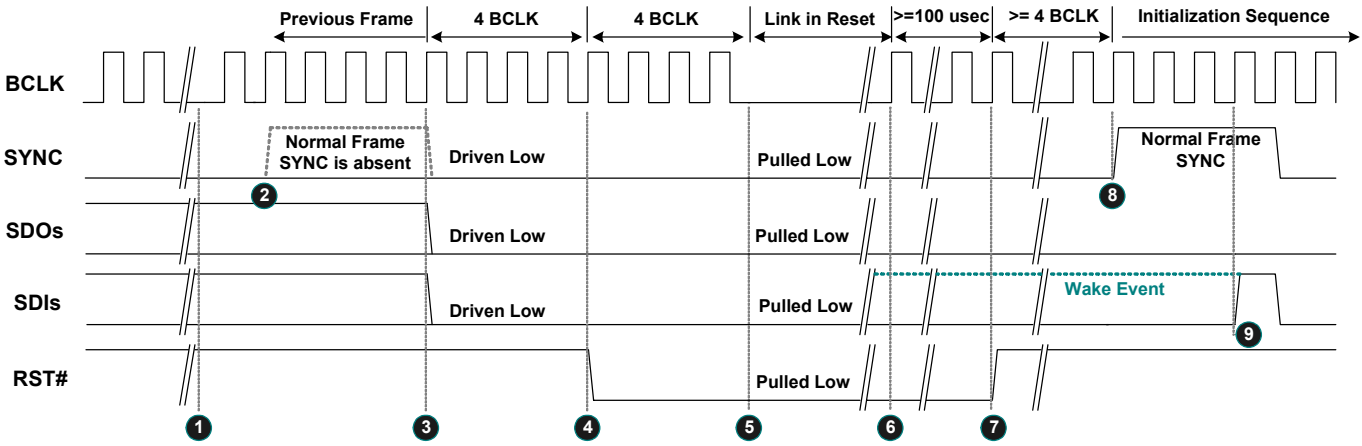

Figure 11. Link Reset Timing

7.3.2. Codec Reset

A 'Codec Reset' is initiated via the Codec RESET command verb. It results in the target codec being reset to the default state. After the target codec completes its reset operation, an initialization sequence is requested.

7.3.3. Codec Initialization Sequence

❶ The codec drives SDI high at the last bit of SYNC to request a Codec Address (CAD) from the controller

❷ The codec will stop driving the SDI during this turnaround period

❸❹❺❻ The controller drives SDI to assign a CAD to the codec

❼ The controller releases the SDI after the CAD has been assigned

❽ Normal operation state

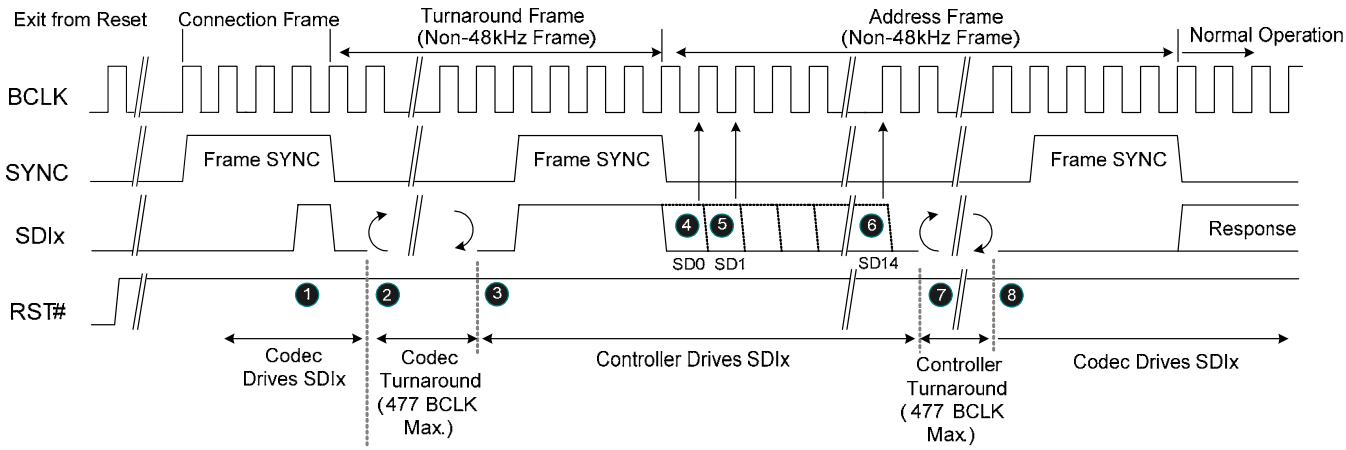

Figure 12. Codec Initialization Sequence

7.4. Verb and Response Format

7.4.1. Command Verb Format

There are two types of verbs: one with 4-Bit identifiers (4-Bit verbs) and 16-Bits of data, the other with 12-Bit identifiers (12-Bit verbs) and 8-Bits of data. Table 10 shows the 4-Bit verb structure of a command stream sent from the controller to operate the codec. Table 11 is the 12-Bit verb structure that gets and controls parameters in the codec.

Table 10. 40-Bit Commands in 4-Bit Verb Format

Bit [39:32]	Bit [31:28]	Bit [27:20]	Bit [19:16]	Bit [15:0]
Reserved	Codec Address	Node ID	Verb ID	Payload

Table 11. 40-Bit Commands in 12-Bit Verb Format

Bit [39:32]	Bit [31:28]	Bit [27:20]	Bit [19:8]	Bit [7:0]
Reserved	Codec Address	Node ID	Verb ID	Payload

7.4.2. Response Format

There are two types of response from the codec to the controller. Solicited Responses are returned by the codec in response to a current command verb. The codec will send Solicited Response data in the next frame, without regard to the Set (Write) or Get (Read) command. The 32-Bit Response is interpreted by software, opaque to the controller.

Unsolicited Responses are sent by the codec independently of software requests. Jack Detection or GPI status information can be actively delivered to the controller and interpreted by software. The 'Tag' in Bit[31:28] is used to identify unsolicited events. This tag is undefined in the HDA specifications.

Table 12. Solicited Response Format

Bit [35]	Bit [34]	Bit [33:32]	Bit [31:0]
Valid	Unsol=0	Reserved	Response

Table 13. Unsolicited Response Format

Bit [35]	Bit [34]	Bit [33:32]	Bit [31:28]	Bit [27:0]
Valid	Unsol=1	Reserved	Tag	Response

Note: The response stream in the link protocol is 36-Bits wide. The response is placed in the lower 32-bit field. Bit-35 is a 'Valid' bit to indicate the response is 'Ready'. Bit-34 is set to indicate that an unsolicited response was sent.

7.4.3. Double Function Reset

This reset is executed by sending two Function Group resets back to back. This does a full initialization and resets all settings to their power on defaults. A Double Reset is defined as two Function Group Reset verbs received without other intervening valid verbs. The reset verbs are not required to be received in sequential frames, but there must not be any other verbs received in frames between the received Function Group Reset verbs (null commands are permitted to be received in frames between Function Group Reset verbs).

7.5. Power Management

The ALC231 does not support Wake-Up events when in low power mode. All power management state changes in widgets are driven by software. Table 14 shows the System Power State Definitions.

In the ALC231, all the widgets, including output/input converters, support power control. Software may have various power states depending on system configuration.

Table 15 indicates those nodes that support power management. To simplify power control, software can configure whole codec power states through the audio function (NID=01h). Output converters (DACs) and input converters (ADCs) have no individual power control to supply fine-grained power control.

Table 14. System Power State Definitions

Power States	Definitions
D0	All power on. Individual DACs and ADCs can be powered up or down as required.
D1	All amplifiers and converters (DACs and ADCs) are powered down. State maintained, analog reference stays up.
D2	All amplifiers and converters (DACs and ADCs) are powered down. State maintained, but analog reference off (D1 + analog reference off).
D3	Power still supplied. The codec stops the internal clock. State is maintained.
D3 (No BitCLK)	Power still supplied. BITCLK stopped and Reset in low state.

Table 15. Power Controls in NID=01h

	Description	D0	D1	D2	D3 (Hot/Cold)	Link Reset
Audio Function (NID=01h)	LINK Response	Normal	Normal	Normal	PD	PD
	DACs	Normal	PD	PD	PD	PD
	ADCs	Normal	PD	PD	PD	PD
	All Headphone Drivers	Normal	Normal	PD	PD	Normal
	All Mixers	Normal	Normal	PD	PD	Normal
	All Reference	Normal	Normal	PD	PD	Normal

Note: PD=Powered Down

Table 16. Powered Down Conditions

Condition	Description
LINK Response powered down	Internal clock is stopped. SDATA-IN and SPDIF-OUT are floated with pulled low 47K resistors internally. Detection of 'Link Reset Entry' and 'Link Reset Exit' sequences are supported. All states are maintained if DVDD is supplied.
DAC powered down	Analog block and digital filter are powered down.
ADC powered down	Analog block and digital filter are powered down. The data on SDATA-IN is quiet.
Headphone Driver powered down	All headphone drivers are powered down.
Mixers powered down	All internal mixer widgets are powered down. The DC reference and VREFOUTx at individual pin complexes are still alive.
Reference power down	All internal references, DC reference, and VREFOUTx at individual pin complexes are off.

7.5.1. ALC231 Additional Power Features

The ALC231 is designed to meet Intel's low-power-state white paper and is ECR HDA-015B compliant. It meets the five attributes discussed in the white paper:

1. D3 state power < 30mW (without PC-Beep pass-through Function)

2. Exit latency (D3 to D0 transfer) < 10ms.

3. Audio pop/click suppression during D3 and D0 transition < -65dBV.

4. Supports Jack detection in D3 state.

5. D3 functions with or without the BITCLK

The ALC231 minimizes D3 state idle mode power consumption and increases overall battery life in mobile systems.

In D3 mode, only a power on reset or a 'double function reset' resets all ALC231 settings, cutting software configuration time spent entering/leaving D3 state, and reducing latency time for D3 to D0 transitions.

The ALC231 supports Wake-Up events in D3 mode, including jack detection and GPIO status changes. If the HDA-Link was alive (with BCLK), the ALC231 Wake-Up response is as normal. If no BITCLK is present, the ALC231 drives the SDI high in order to wake up the system.

8. Supported Verbs and Parameters

This section describes the Verbs and Parameters supported by various widgets in the ALC231. If a verb is not supported by the addressed widget, it will respond with 32 bits of '0'.

8.1. Verb – Get Parameters (Verb ID=F00h)

The 'Get Parameters' verb is used to get system information and the function capabilities of the HDA codec. All the parameters are read-only. Refer to section 7.4.1 Command Verb Format, page 21, to get detailed information about supported parameters.

Table 17. Verb – Get Parameters (Verb ID=F00h)

Get Parameter Command Format

Bit [31:28]	Bit [27:20]	Bit [19:8]	Payload Bit [7:0]
Cad=X	Node ID=00h	Verb ID=F00h	Parameter ID[7:0]

Codec Response Format

Response [31:0]
32-bit Response

Note: If the parameter ID is not supported, the returned response is 32 bits of '0'.

8.1.1. Parameter – Vendor ID (Verb ID=F00h, Parameter ID=00h)

Table 18. Parameter – Vendor ID (Verb ID=F00h, Parameter ID=00h)

Codec Response Format

Bit	Description
31:16	Vendor ID=10ECh (Realtek's PCI vendor ID).
15:0	Device ID=0231h.

Note: The Root Node (NID=00h) supports this parameter.

8.1.2. Parameter – Revision ID (Verb ID=F00h, Parameter ID=02h)

Table 19. Parameter – Revision ID (Verb ID=F00h, Parameter ID=02h)

Codec Response Format

Bit	Description
31:24	Reserved. Read as 0's.
23:20	MajRev. The major version number (in decimal) of the HDA Spec to which the ALC231 is fully compliant.
19:16	MinRev. The minor version number (in decimal) of the HDA Spec to which the ALC231 is fully compliant.
15:8	Revision ID. The vendor's revision number. 00h is for the first silicon version A, 01h is for the second version B, etc.
7:0	Stepping ID. The vendor's stepping number within the given Revision ID.

Note: The Root Node (NID=00h in the ALC231) supports this parameter.

For example, Revision ID=00h and Stepping ID=00h indicates the silicon is the A0 version.

8.1.3. Parameter – Subordinate Node Count (Verb ID=F00h, Parameter ID=04h)

For the root node, the Subordinate Node Count provides information about audio function group nodes associated with the root node. For function group nodes, it provides the total number of widgets associated with this function node.

Table 20. Parameter – Subordinate Node Count (Verb ID=F00h, Parameter ID=04h)

Codec Response Format

Bit	Description
31:24	Reserved. Read as 0's.
23:16	Starting Node Number. The starting node number in the sequential widgets.
15:8	Reserved. Read as 0's.
7:0	Total Number of Nodes. For a root node, the total number of function groups in the root node. For a function group, the total number of widget nodes in the function group.

8.1.4. Parameter – Function Group Type (Verb ID=F00h, Parameter ID=05h)

Table 21. Parameter – Function Group Type (Verb ID=F00h, Parameter ID=05h)

Codec Response Format

Bit	Description
31:9	Reserved. Read as 0's.
8	UnSol Capable. 0: Unsolicited response is not supported by this function group 1: Unsolicited response is supported by this function group
7:0	Function Group Type. 00h: Reserved 01h: Audio Function 02h: Modem Function 03h~7Fh: Reserved 80h~FFh: Vendor Defined Function.

Note: The Audio Function Group (NID=01h) supports this parameter.

8.1.5. Parameter – Audio Function Capabilities (Verb ID=F00h, Parameter ID=08h)

Table 22. Parameter – Audio Function Capabilities (Verb ID=F00h, Parameter ID=08h)

Codec Response Format

Bit	Description
31:17	Reserved. Read as 0's.
16	Beep Generator. A '1' indicates the presence of an integrated Beep generator within the Audio Function Group.
15:12	Reserved. Read as 0's.
11:8	Input Delay.
7:4	Reserved. Read as 0's.
3:0	Output Delay.

Note: The Audio Function Group (NID=01h) supports this parameter.

8.1.6. Parameter – Audio Widget Capabilities (Verb ID=F00h, Parameter ID=09h)

Table 23. Parameter – Audio Widget Capabilities (Verb ID=F00h, Parameter ID=09h)

Codec Response Format

Bit	Description
31:24	Reserved. Read as 0's.
23:20	Widget Type. 0h: Audio Output 1h: Audio Input 2h: Mixer 3h: Selector 4h: Pin Complex 5h: Power Widget 6h: Volume Knob Widget 7h~Eh: Reserved Fh: Vendor defined audio widget
19:16	Delay. Samples delayed between the HDA link and widgets.
15:11	Reserved. Read as 0's.
10	Power Control. 0: Power state control is not supported on this widget 1: Power state is supported on this widget
9	Digital. 0: An analog input or output converter 1: A widget translating digital data between the HDA link and digital I/O (SPDIF, I2S, etc.)
8	ConnList. Connection List. 0: Connected to HDA link. No Connection List Entry should be queried 1: Connection List Entry must be queried
7	UnsolCap. Unsolicited Capable. 0: Unsolicited response is not supported 1: Unsolicited response is supported
6	ProcWidget. Processing Widget. 0: No processing control 1: Processing control is supported
5	Reserved. Read as 0.
4	Format Override.
3	AmpParOvr. AMP Param Override.
2	OutAmpPre. Out AMP Present.
1	InAmpPre. In AMP Present.
0	Stereo. 0: Mono Widget 1: Stereo Widget

8.1.7. Parameter – Supported PCM Size, Rates (Verb ID=F00h, Parameter ID=0Ah)

Parameters here provide information about formats. Individual converters have their own parameters to provide supported formats if their 'Format Override' bit is set.

Table 24. Parameter – Supported PCM Size, Rates (Verb ID=F00h, Parameter ID=0Ah)

Codec Response Format

Bit	Description
31:21	Reserved. Read as 0's.
20	B32. Indicates whether 32-Bit audio format is supported. 0: Not supported 1: Supported
19	B24. Indicates whether 24-Bit audio format is supported. 0: Not supported 1: Supported
18	B20. Indicates whether 20-Bit audio format is supported. 0: Not supported 1: Supported
17	B16. Indicates whether 16-Bit audio format is supported. 0: Not supported 1: Supported
16	B8. Indicates whether 8-Bit audio format is supported. 0: Not supported 1: Supported
15:12	Reserved. Read as 0's.
11	R12. Indicates whether 384kHz (=8*48kHz) rate is supported. 0: Not supported 1: Supported
10	R11. Indicates whether 192kHz (=4*48kHz) rate is supported. 0: Not supported 1: Supported
9	R10. Indicates whether 176.4kHz (=4*44.1kHz) rate is supported. 0: Not supported 1: Supported
8	R9. Indicates whether 96kHz (=2*48kHz) rate is supported. 0: Not supported 1: Supported
7	R8. Indicates whether 88.2kHz (=2*44.1kHz) rate is supported. 0: Not supported 1: Supported
6	R7. Indicates whether 48kHz rate is supported. 0: Not supported 1: Supported
5	R6. Indicates whether 44.1kHz rate is supported. 0: Not supported 1: Supported
4	R5. Indicates whether 32kHz (=2/3*48kHz) rate is supported. 0: Not supported 1: Supported
3	R4. Indicates whether 22.05kHz (=1/2*44.1kHz) rate is supported. 0: Not supported 1: Supported
2	R3. Indicates whether 16kHz (=1/3*48kHz) rate is supported. 0: Not supported 1: Supported
1	R2. Indicates whether 11.025kHz (=1/4*44.1kHz) rate is supported. 0: Not supported 1: Supported
0	R1. Indicates whether 8kHz (=1/6*48kHz) rate is supported. 0: Not supported 1: Supported

8.1.8. Parameter – Supported Stream Formats (Verb ID=F00h, Parameter ID=0Bh)

Parameters in this node only provide default information for audio function groups. Individual converters have their own parameters to provide supported formats if the 'Format Override' bit is set.

Table 25. Parameter – Supported Stream Formats (Verb ID=F00h, Parameter ID=0Bh)

Codec Response Format

Bit	Description
31:3	Reserved. Read as 0's.
2	AC3. 0: Not supported 1: Supported
1	Float32. 0: Not supported 1: Supported
0	PCM. 0: Not supported 1: Supported

Note: Input converters and output converters support this parameter.

8.1.9. Parameter – Pin Capabilities (Verb ID=F00h, Parameter ID=0Ch)

The Pin Capabilities parameter returns a bit field describing the capabilities of the Pin Complex widget.

Table 26. Parameter – Pin Capabilities (Verb ID=F00h, Parameter ID=0Ch)

Codec Response Format

Bit	Description
31:16	Reserved. Read as 0's.
15:8	VREF Control Capability. '1' in corresponding bit field indicates signal levels of associated Vrefout are specified as a percentage of AVDD. 7:6: Reserved; 5: 100%; 4: 80%; 3: Reserved; 2: Ground; 1: 50%; 0: Hi-Z
7	L-R Swap. Indicates the capability of swapping the left and rights.
6	Balanced I/O Pin. '1' indicates this pin complex has balanced pins.
5	Input Capable. '1' indicates this pin complex supports input.
4	Output Capable. '1' indicates this pin complex supports output.
3	Headphone Drive Capable. '1' indicates this pin complex has an amplifier to drive a headphone.
2	Presence Detect Capable. '1' indicates this pin complex can detect whether there is anything plugged in.
1	Trigger Required. '1' indicates whether a software trigger is required for an impedance measurement.
0	Impedance Sense Capable. '1' indicates this pin complex can perform analog sense on the attached device to determine its type.

Note: Only Pin Complex widgets support this parameter.

8.1.10. Parameter – Amplifier Capabilities (Verb ID=F00h, Input Amplifier Parameter ID=0Dh)

Parameters in this node provide audio function group default information. Individual converters have their own parameters to provide amplifier capabilities if the 'AMP Param Override' bit is set.

Table 27. Parameter – Amplifier Capabilities (Verb ID=F00h, Input Amplifier Parameter ID=0Dh)

Codec Response Format

Bit	Description
31	(Input) Mute Capable.
30:23	Reserved. Read as 0.
22:16	Step Size. Indicates the size of each step in the gain range. Each step may be 0~32dB, specified in 0.25dB steps. '0' indicates a step of 0.25dB. '127' indicates a step of 32dB.
15	Reserved. Read as 0.
14:8	Number of Steps. Indicates the number of steps in the gain range. '0' means the gain is fixed.
7	Reserved. Read as 0.
6:0	Offset. Indicates which step is 0dB.

8.1.11. Parameter – Amplifier Capabilities (Verb ID=F00h, Output Amplifier Parameter ID=12h)

Parameters in this node provide audio function group default information. Individual converters have their own parameters to provide amplifier capabilities if the 'AMP Param Override' bit is set.

Table 28. Parameter – Amplifier Capabilities (Verb ID=F00h, Output Amplifier Parameter ID=12h)

Codec Response Format

Bit	Description
31	(Output) Mute Capable.
30:23	Reserved. Read as 0.
22:16	Step Size. Indicates the size of each step in the gain range. Each step may be 0~32dB, specified in 0.25dB steps. '0' indicates a step of 0.25dB. '127' indicates a step of 32dB.
15	Reserved. Read as 0.
14:8	Number of Steps. Indicates the number of steps in the gain range. '0' means the gain is fixed.
7	Reserved. Read as 0.
6:0	Offset. Indicates which step is 0dB.

8.1.12. Parameter – Connect List Length (Verb ID=F00h, Parameter ID=0Eh)

Parameters in this node provide audio function widget connection information.

Table 29. Parameter – Connect List Length (Verb ID=F00h, Parameter ID=0Eh)

Codec Response Format

Bit	Description
31:8	Reserved. Read as 0.
7	Short Form. 0: Short Form 1: Long Form
6:0	Connect List Length. Indicates the number of inputs connected to a widget. If the Connect List Length is 1, there is only one input, and there is no Connection Select Control (Not a MUX widget).

8.1.13. Parameter – Supported Power States (Verb ID=F00h, Parameter ID=0Fh)

Table 30. Parameter – Supported Power States (Verb ID=F00h, Parameter ID=0Fh)

Codec Response Format

Bit	Description
31:4	Reserved. Read as 0's.
3	D3Sup. 1: Power state D3 is supported.
2	D2Sup. 1: Power state D2 is supported.
1	D1Sup. 1: Power state D1 is supported.
0	D0Sup 1: Power state D0 is supported.

8.1.14. Parameter – Processing Capabilities (Verb ID=F00h, Parameter ID=10h)

Table 31. Parameter – Processing Capabilities (Verb ID=F00h, Parameter ID=10h)

Codec Response Format

Bit	Description
31:16	Reserved. Read as 0's.
15:8	NumCoeff. Number of Coefficient.
7:1	Reserved. Read as 0's.
0	Benign. 0: Processing unit is not linear and time invariant 1: Processing unit is linear and time invariant

8.1.15. Parameter – GPIO Capabilities (Verb ID=F00h, Parameter ID=11h)

Table 32. Parameter – GPIO Capabilities (Verb ID=F00h, Parameter ID=11h)

Codec Response Format

Bit	Description
31	GPIWake=0. The ALC231 does not support GPIO wake up function.
30	GPIUnsol=1. The ALC231 supports GPIO unsolicited response.
29:24	Reserved. Read as 0's.
23:16	NumGPIs=00h. No GPI pin is supported.
15:8	NumGPOs=00h. No GPO pin is supported.
7:0	NumGPIOs=02h. Two GPIO pins are supported.

8.1.16. Parameter – Volume Knob Capabilities (Verb ID=F00h, Parameter ID=13h)

The ALC231 does not support volume control knob.

Table 33. Parameter – Volume Knob Capabilities (Verb ID=F00h, Parameter ID=13h)

Codec Response Format

Bit	Description
31:8	Reserved. Read as 0's.
7	Delta. 0: Software cannot modify the Volume Control Knob volume 1: Software can write a base volume to the Volume Control Knob
6:0	NumSteps. The number of steps in the range of the Volume Control Knob.

8.2. Verb – Get Connection Select Control (Verb ID=F01h)

Table 34. Verb – Get Connection Select Control (Verb ID=F01h)

Get Command Format

Bit [31:28]	Bit [27:20]	Bit [19:8]	Payload Bit [7:0]
Cad=X	Node ID=Xh	Verb ID=F01h	0's

Codec Response Format

Response [31:0]
Bit[7:0] are Connection Index

Codec Response for Multiplexer Widget NID=14h (Port-D), 1Ah (Port-C), 1Bh (Port-E), 21h (Port-I)

Bit	Description
31:8	0's.
7:0	Connection Index currently Set (Default value is 00h). 00h: Pin Widget NID=0Ch 01h: Pin Widget NID=0Dh Other: Reserved

Codec Response for Multiplexer Widget NID=22h

Bit	Description
31:8	0's.
7:0	Connection Index Currently Set (Default value is 00h). 00h: Pin Widget NID=18h 01h: Pin Widget NID=19h 02h: Pin Widget NID=1Ah 03h: Pin Widget NID=1Bh 04h: Pin Widget NID=1Dh 05h: Pin Widget NID=0Bh 06h: Mixer Widget NID=12h 07h: Mixer Widget NID=0Ch 08h: Mixer Widget NID=0Dh Other: Reserved

Codec Response for other NID

Bit	Description
31:0	Not Supported (Returns 00000000h).

8.3. Verb – Set Connection Select (Verb ID=701h)

Table 35. Verb – Set Connection Select (Verb ID=701h)

Set Command Format

Bit [31:28]	Bit [27:20]	Bit [19:8]	Payload Bit [7:0]
Cad=X	Node ID=Xh	Verb ID=701h	Select Index [7:0]

Codec Response Format

Response [31:0]
0's for all nodes

8.4. Verb – Get Connection List Entry (Verb ID=F02h)

Table 36. Verb – Get Connection List Entry (Verb ID=F02h)

Get Command Format

Bit [31:28]	Bit [27:20]	Bit [19:8]	Payload Bit [7:0]
Cad=X	Node ID=Xh	Verb ID=F02h	Offset Index – N[7:0]

Codec Response Format

Response [31:0]
32-bit Response

Codec Response for NID=08h ADC

Bit	Description
31:8	Connection List Entry (N+3), (N+2), (N+1). Returns 000000h.
7:0	Connection List Entry (N). Returns 23h (Sum Widget) for N=0~3. Returns 00h for N>3.

Codec Response for NID=09h ADC

Bit	Description
31:8	Connection List Entry (N+3), (N+2), (N+1). Returns 000000h.
7:0	Connection List Entry (N). Returns 22h (Sum Widget) for N=0~3. Returns 00h for N>3.

Codec Response for NID=0Bh Mixer

Bit	Description
31:24	Connection List Entry (N+3), (N+2). Returns 1Bh (LINE2) for N=0~3. Returns 00h for N>3.
23:16	Connection List Entry (N+1). Returns 1Ah (LINE1) for N=0~3. Returns 00h for N>3.
15:8	Connection List Entry (N+1). Returns 19h (MIC2) for N=0~3. Returns 00h for N>3.
7:0	Connection List Entry (N). Returns 18h (MIC1) for N=0~3. Returns 1Dh (PCBEEP) for N=4~7. Returns 00h for N>3.

Codec Response for NID=0Ch

Bit	Description
31:16	Connection List Entry (N+3), (N+2). Returns 0000h.
15:8	Connection List Entry (N+1). Returns 0Bh (Mixer) for N=0~3. Returns 00h for N>3.
7:0	Connection List Entry (N). Returns 02h (LINE-OUT DAC) for N=0~3. Returns 00h for N>3.

Codec Response for NID=0Dh

Bit	Description
31:16	Connection List Entry (N+3), (N+2). Returns 0000h.
15:8	Connection List Entry (N+1). Returns 0Bh (Mixer) for N=0~3. Returns 00h for N>3.
7:0	Connection List Entry (N). Returns 03h (SURR DAC) for N=0~3. Returns 00h for N>3.

Codec Response for NID=0Fh

Bit	Description
31:16	Connection List Entry (N+3), (N+2). Returns 0000h.
15:8	Connection List Entry (N+1). Returns 0Bh (Mixer) for N=0~3. Returns 00h for N>3.
7:0	Connection List Entry (N). Returns 02h (LINE-OUT DAC) for N=0~3. Returns 00h for N>3.

Codec Response for NID=14h (Pin Widget: LINE-OUT)

Bit	Description
31:16	Connection List Entry (N+3), (N+2). Returns 0000h.
15:8	Connection List Entry (N+1). Returns 0Dh (Mixer) for N=0~3. Returns 00h for N>3.
7:0	Connection List Entry (N). Returns 0Ch (Mixer) for N=0~3. Returns 00h for N>3.

Codec Response for NID=17h (Pin Widget: MONO-OUT)

Bit	Description
31:8	Connection List Entry (N+3), (N+2), (N+1). Returns 000000h.
7:0	Connection List Entry (N). Returns 0Fh (Mixer) for N=0~3. Returns 00h for N>3.

Codec Response for NID=18h (Pin Widget: MIC1)

Bit	Description
31:8	Connection List Entry (N+3), (N+2), (N+1). Returns 000000h.
7:0	Connection List Entry (N). Returns 0Dh (Mixer) for N=0~3. Returns 00h for N>3.

Codec Response for NID=1Ah (Pin Widget: LINE1), 1Bh (Pin Widget: LINE2), 21h (Pin Widget: HP-OUT)

Bit	Description
31:16	Connection List Entry (N+3), (N+2). Returns 0000h.
15:8	Connection List Entry (N+1). Returns 0Dh (Mixer) for N=0~3. Returns 00h for N>3.
7:0	Connection List Entry (N). Returns 0Ch (Mixer) for N=0~3. Returns 00h for N>3.

Codec Response for NID=1Eh (Pin Widget: SPDIF-OUT)

Bit	Description
31:8	Connection List Entry (N+3, (N+2), (N+1). Returns 000000h.
7:0	Connection List Entry (N). Return 06h (SPDIF-OUT converter) for N=0~3. Returns 00h for N>3.

Codec Response for NID=22h (MUX Widget)

Bit	Description
31:24	Connection List Entry (N+3). Return 1Bh (Pin Complex - LINE2) for N=0~3. Return 00h for N>3.
23:16	Connection List Entry (N+2). Return 1Ah (Pin Complex - LINE1) for N=0~3. Return 12h (Pin Complex – Digital MIC) for N=4~7. Return 00h for N>7.
15:8	Connection List Entry (N+1). Return 19h (Pin Complex - MIC2) for N=0~3. Return 0Bh (Mixer) for N=4~7. Return 00h for N>7.
7:0	Connection List Entry (N). Return 18h (Pin Complex - MIC1) for N=0~3. Return 1Dh (Pin Complex - PCBEEP) for N=4~7. Return 00h for N>7.

Codec Response for NID=23h (Mixer Widget)

Bit	Description
31:24	Connection List Entry (N+3). Return 1Bh (Pin Complex - LINE2) for N=0~3. Return 00h for N>3.
23:16	Connection List Entry (N+2). Return 1Ah (Pin Complex - LINE1) for N=0~3. Return 00h for N>3.
15:8	Connection List Entry (N+1). Return 19h (Pin Complex - MIC2) for N=0~3. Return 0Bh (Mixer Widget) for N=4~7. Return 00h for N>3.
7:0	Connection List Entry (N). Return 18h (Pin Complex - MIC1) for N=0~3. Return 1Dh (Pin Complex - PCBEEP) for N=4~7. Return 00h for N>7.

Codec Response for Other NID

Bit	Description
31:0	Not Supported (returns 00000000h).

8.5. Verb – Get Processing State (Verb ID=F03h)

Table 37. Verb – Get Processing State (Verb ID=F03h)

Get Command Format

Bit [31:28]	Bit [27:20]	Bit [19:8]	Payload Bit [7:0]
Cad=X	Node ID=Xh	Verb ID=F03h	0's

Codec Response Format

Response [31:0]
32-bit response

Codec Response for All NID

Bit	Description
31:0	Not Supported (returns 00000000h).

8.6. Verb – Set Processing State (Verb ID=703h)

Table 38. Verb – Set Processing State (Verb ID=703h)

Set Command Format

Bit [31:28]	Bit [27:20]	Bit [19:8]	Payload Bit [7:0]
Cad=X	Node ID=Xh	Verb ID=703h	Processing State [7:0]

Codec Response Format

Response [31:0]
0's for all nodes

Codec Response for All NID

Bit	Description
31:0	0's.

8.7. Verb – Get Coefficient Index (Verb ID=Dh)

Table 39. Verb – Get Coefficient Index (Verb ID=Dh)

Get Command Format

Bit [31:28]	Bit [27:20]	Bit [19:16]	Payload Bit [15:0]
Cad=X	Node ID=20h	Verb ID=Dh	0's

Codec Response Format

Response [31:0]
Bit [15:0] are Coefficient Index

Codec Response for NID=20h (Realtek Vendor Registers)

Bit	Description
31:16	Reserved. Read as 0's.
15:0	Coefficient Index.

Codec Response for Other NID

Bit	Description
31:0	Not Supported (returns 00000000h).

8.8. Verb – Set Coefficient Index (Verb ID=5h)

Table 40. Verb – Set Coefficient Index (Verb ID=5h)

Set Command Format

Bit [31:28]	Bit [27:20]	Bit [19:16]	Payload Bit [15:0]
Cad=X	Node ID=20h	Verb ID=5h	Coefficient Index [15:0]

Codec Response Format

Response [31:0]
0's for all nodes

Codec Response for All NID

Bit	Description
31:0	0's.

8.9. Verb – Get Processing Coefficient (Verb ID=Ch)

Table 41. Verb – Get Processing Coefficient (Verb ID=Ch)

Get Command Format

Bit [31:28]	Bit [27:20]	Bit [19:16]	Payload Bit [15:0]
Cad=X	Node ID=20h	Verb ID=Ch	0's

Codec Response Format

Response [31:0]
Processing Coefficient [15:0]

Codec Response for NID=20h (Realtek Vendor Registers)

Bit	Description
31:16	Reserved. Read as 0's.
15:0	Processing Coefficient.

Codec Response for Other NID

Bit	Description
31:0	Not Supported (returns 00000000h).

8.10. Verb – Set Processing Coefficient (Verb ID=4h)

Table 42. Verb – Set Processing Coefficient (Verb ID=4h)

Set Command Format

Bit [31:28]	Bit [27:20]	Bit [19:16]	Payload Bit [15:0]
Cad=X	Node ID=20h	Verb ID=4h	Coefficient [15:0]

Codec Response Format

Response [31:0]
0's for all nodes

Codec Response for All NID

Bit	Description
31:0	0's

8.11. Verb – Get Amplifier Gain (Verb ID=Bh)

This verb is used to get gain/attenuation settings from each widget.

Table 43. Verb – Get Amplifier Gain (Verb ID=Bh)

Get Command Format

Bit [31:28]	Bit [27:20]	Bit [19:16]	Payload Bit [15:0]
Cad=X	Node ID=Xh	Verb ID=Bh	'Get' payload [15:0]

Codec Response Format

Response [31:0]
Bit[7:0] are responsible for 'Get'

'Get' Payload in Command Bit[15:0]

Bit	Description
15	Get Input/Output. 0: Input amplifier gain is requested 1: Output amplifier gain is requested
14	Reserved. Read as 0.
13	Get Left/Right. 0: Right amplifier gain is requested 1: Left amplifier gain is requested
12:4	Reserved. Read as 0's.
3:0	Index[3:0] for Input Source. Select amplifier for this converter. If a widget has no multiple input sources, the index will be ignored.

Codec Response for NID=02h (LINE-OUT DAC) and 03h (SURR DAC)

Bit	Description
31:8	0's.
7	Payload[15] is 0 in 'Get Amplifier Gain': Read as 0 (No Input Amplifier Mute). Payload[15] is 1 in 'Get Amplifier Gain': Read as 0 (No Output Amplifier Mute).
6:0	Payload[15] is 0 in 'Get Amplifier Gain': Read as 0's (No Input Amplifier Gain). Payload[15] is 1 in 'Get Amplifier Gain': 6-bit control specifying the volume from–65.25dB~0dB in 0.75dB step.

Node	Gain[6:0] (Default)	Gain Range
LINE-OUT DAC(NID=02h)	1010111b=57h (0dB)	–65.25dB~0dB in 0.75dB step
SURR DAC (NID=03h)	1010111b=57h (0dB)	–65.25dB~0dB in 0.75dB step

Codec Response for NID=08h, 09h (ADCs)

Bit	Description
31:8	0's.
7	Payload[15] is 0 in 'Get Amplifier Gain': Input Amplifier Mute. 0: Unmute 1: Mute (Default) Payload[15] is 1 in 'Get Amplifier Gain': Read as 0 (No Output Amplifier Gain).
6:0	Payload[15] is 0 in 'Get Amplifier Gain': Input Amplifier Gain [6:0]. Specifying the volume from –16.5dB~30dB in 1.5dB step. **Node** / **Gain[6:0] Default** / **Gain Range** ADC (NID=08h) / 0001011b=0Bh (0dB) / –16.5dB~30dB in 1.5dB step ADC(NID=09h) / 0001011b=0Bh (0dB) / –16.5dB~30dB in 1.5dB step Payload[15] is 1 in 'Get Amplifier Gain': Read as 0 (No Output Amplifier Gain).

Codec Response for NID=0Ch, 0Dh and 0Fh (Mixer)

Bit	Description
31:8	0's.
7	Payload[15] is 0 in 'Get Amplifier Gain': 1: Mute, 0:Unmute (Input Amplifier Mute). Payload[15] is 1 in 'Get Amplifier Gain': Read as 0 (No Output Amplifier Mute).
6:0	Payload[15] is 0 in 'Get Amplifier Gain': Read as 0's (No Input Amplifier Gain). Payload[15] is 1 in 'Get Amplifier Gain': Read as 0's (No Output Amplifier Gain).

Codec Response for NID=18h, 1Ah and 1Bh (Pin widget: MIC1, LINE1 and LINE2)

Bit	Description
31:8	0's.
7	Payload[15] is 0 in 'Get Amplifier Gain': Read as 0's (No Input Amplifier Mute). Payload[15] is 1 in 'Get Amplifier Gain': 1: Mute, 0:Unmute (Output Amplifier Mute, default=1).
6:0	Payload[15] is 0 in 'Get Amplifier Gain': Input Amplifier Gain [6:0]. The volume 0dB/12dB/24dB/36dB in 12dB per step (default=0, 0dB). Payload[15] is 1 in 'Get Amplifier Gain': Read as 0 (No Output Amplifier Gain).

Codec Response for NID=12h and 19h (Pin widget: DMIC and MIC2)

Bit	Description
31:8	0's.
7	Payload[15] is 0 in 'Get Amplifier Gain': Read as 0's (No Input Amplifier Mute). Payload[15] is 1 in 'Get Amplifier Gain': Read as 0 (No Output Amplifier Mute).
6:0	Payload[15] is 0 in 'Get Amplifier Gain': Input Amplifier Gain [6:0]. The volume 0dB/12dB/24dB/36dB in 12dB per step (default=0, 0dB). Payload[15] is 1 in 'Get Amplifier Gain': Read as 0 (No Output Amplifier Gain).

Codec Response for NID=14h, 17h and 21h (Pin widget: SPK-OUT, MONO-OUT and HP-OUT)

Bit	Description
31:8	0's.
7	Payload[15] is 0 in 'Get Amplifier Gain': Read as 0's (No Input Amplifier Mute). Payload[15] is 1 in 'Get Amplifier Gain': 1: Mute, 0:Unmute (Output Amplifier Mute, default=1).
6:0	Payload[15] is 0 in 'Get Amplifier Gain': Read as 0's (No Input Amplifier Gain). Payload[15] is 1 in 'Get Amplifier Gain': Read as 0 (No Output Amplifier Gain).

Codec Response for NID=0Bh (Mixer)

Bit	Description
31:8	0's.
7	Payload[15] is 0 in 'Get Amplifier Gain': Input Amplifier Mute. 0: Unmute, 1: Mute (Default for all) Payload[15] is 1 in 'Get Amplifier Gain': Read as 0 (No Output Amplifier Mute).
6:0	Payload[15] is 0 in 'Get Amplifier Gain': Input Amplifier Gain [6:0]. Specifying the volume from -34.5dB~+12dB in 1.5dB step (Default: 17h, 0dB). Payload[15] is 1 in 'Get Amplifier Gain': Read as 0 (No Output Amplifier Gain).

	Index=0 (MIC1)	Index=1 (MIC2)	Index=2 (LINE1)	Index=3 (LINE2)	Index=4 (PCBEEP)	Index=5 (LINE-OUT DAC)	Index > 6 Other
Mute [7]	0/1	0/1	0/1	0/1	0/1	0	0/1
Gain [6:0]	00h-1Fh	00h-1Fh	00h-1Fh	00h-1Fh	00h-1Fh	00h-1Fh	00h
Default[7:0]	10000000	10000000	10000000	10000000	10000000	10000000	00000000

Codec Response for NID=23h (Mixer)

Bit	Description
31:8	0's.
7	Payload[15] is 0 in 'Get Amplifier Gain': Input Amplifier Mute. 0: Unmute, 1: Mute (Default for all) Payload[15] is 1 in 'Get Amplifier Gain': Read as 0 (No Output Amplifier Mute).
6:0	Payload[15] is 0 in 'Get Amplifier Gain': Read as 0 (No Input Amplifier Gain). Payload[15] is 1 in 'Get Amplifier Gain': Read as 0 (No Output Amplifier Gain).

	Index=0 (MIC1)	Index=1 (MIC2)	Index=2 (LINE1)	Index=3 (LINE2)	Index=4 (PCBEEP)	Index=5 (Mixer)	Index>6 (Other)
Mute [7]	0/1	0/1	0/1	0/1	0/1	0/1	0
Gain [6:0]	0s	0s	0s	0s	0s	0s	0
Default[7:0]	10000000	10000000	10000000	10000000	10000000	10000000	00000000

Codec Response to Other NID

Bit	Description
31:0	Not Supported (returns 00000000h).

8.12. Verb – Set Amplifier Gain (Verb ID=3h)

This verb is used to set amplifier gain/attenuation in each widget.

Table 44. Verb – Set Amplifier Gain (Verb ID=3h)

Set Command Format

Bit [31:28]	Bit [27:20]	Bit [19:8]	Payload Bit [7:0]
Cad=X	Node ID=Xh	Verb ID=3h	'Set' payload [7:0]

Codec Response Format

Response [31:0]
0's for all nodes

'Set' Payload in Command Bit[15:0]

Bit	Description
15	Set Output Amp. 1 indicates output amplifier gain will be set.
14	Set Input Amp. 1 indicates input amplifier gain will be set.
13	Set Left Amp. 1 indicates left amplifier gain will be set.
12	Set Right Amp. 1 indicates right amplifier gain will be set.
11:8	Index Offset (for input amplifiers on Sum widgets and Selector Widgets). 5 bits index offset in connection list is used to select which input gain will be set on a mixer or a multiplexer widget. The index is ignored if the node is not a mixer or a multiplexer widget, or the 'Set Input Amp' bit is not set.
7	Mute. 0: Unmute 1: Mute (-∞gain)
6:0	Gain[6:0]. A 7-bit step value specifying the amplifier gain.

8.13. Verb – Get Converter Format (Verb ID=Ah)

Table 45. Verb – Get Converter Format (Verb ID=Ah)

Get Command Format

Bit [31:28]	Bit [27:20]	Bit [19:16]	Payload Bit [15:0]
Cad=X	Node ID=Xh	Verb ID=Ah	0's

Codec Response Format

Response [31:0]
Bit[15:0] are converter format

Codec Response for NID=02h, 03h, 06h (Output Converters: LINE-OUT DAC, SURR DAC, SPDIF-OUT).
Codec Response for NID=08h, 09h (Input Converters: ADCs)

Bit	Description
31:16	Reserved. Read as 0.
15	Stream Type (TYPE). 0: PCM 1: Non-PCM
14	Sample Base Rate (BASE). 0: 48kHz 1: 44.1kHz
13:11	Sample Base Rate Multiple (MULT). 000b: *1 001b: *2 010b: *3 011b: *4 100b~111b: Reserved.
10:8	Sample Base Rate Divisor (DIV). 000b: /1 001b: /2 010b: /3 011b: /4 100b: /5 101b: /6 110b: /7 111b: /8 The ALC231 does not support Divisor. Always read as 000b.
7	Reserved. Read as 0.
6:4	Bits per Sample (BITS). 000b: 8 bits 001b: 16 bits 010b: 20 bits 011b: 24 bits 100b: 32 bits 101b~111b: Reserved
3:0	Number of Channels. 0: 1 channel 1: 2 channels 2: 3 channels ..... 15: 16 channels

	BASE	MULT	DIV	BITS	Sample Rate
NID=02h (LOUT-OUT DAC)	0	000b, 001b, 011b	000b	001b, 010b, 011b	48K, 96K,192K
	1	000b	000b	001b, 010b, 011b	44.1K
NID=03h (SURR DAC)	0	000b, 001b, 011b	000b	001b, 010b, 011b	48K, 96K,192K
	1	000b	000b	001b, 010b, 011b	44.1K
NID=06h (SPDIF-OUT)	0	000b, 001b, 011b	000b	001b, 010b, 011b, 100b	48K, 96K, 192K
	1	000b, 001b	000b	001b, 010b, 011b, 100b	44.1K, 88.2K
	0	001b	010b	001,010b, 011b	32K
NID=08h (ADC)	0	000b, 001b	000b	001b, 010b, 011b, 100b	48K, 96K, 192K
	1	000b	000b	001b, 010b, 011b	44.1K
NID=09h (ADC)	0	000b, 001b	000b	001b, 010b, 011b, 100b	48K, 96K, 192K
	1	000b	000b	001b, 010b, 011b	44.1K

Codec Response for other NID

Bit	Description
31:0	Not Supported (returns 00000000h).

8.14. Verb – Set Converter Format (Verb ID=2h)

Table 46. Verb – Set Converter Format (Verb ID=2h)

Set Command Format

Bit [31:28]	Bit [27:20]	Bit [19:16]	Payload Bit [15:0]
Cad=X	Node ID=Xh	Verb ID=2h	Set format [15:0]

Codec Response Format

Response [31:0]
0's for all nodes

'Set' Payload in Command Bit[15:0]

Bit	Description
31:16	Reserved. Read as 0.
15	Stream Type (TYPE). 0: PCM 1: Non-PCM
14	Sample Base Rate (BASE). 0: 48kHz 1: 44.1kHz
13:11	Sample Base Rate Multiple (MULT). 000b: *1 001b: *2 010b: *3 011b: *4 100b~111b: Reserved.
10:8	Sample Base Rate Divisor (DIV). 000b: /1 001b: /2 010b: /3 011b: /4 100b: /5 101b: /6 110b: /7 111b: /8
7	Reserved. Read as 0.
6:4	Bits per Sample (BITS). 000b: 8 bits 001b: 16 bits 010b: 20 bits 011b: 24 bits 100b: 32 bits 101b~111b: Reserved
3:0	Number of Channels. 0: 1 channel 1: 2 channels 2: 3 channels ..... 15: 16 channels

8.15. Verb – Get Power State (Verb ID=F05h)

Table 47. Verb – Get Power State (Verb ID=F05h)

Get Command Format

Bit [31:28]	Bit [27:20]	Bit [19:8]	Payload Bit [7:0]
Cad=X	Node ID=Xh	Verb ID=F05h	0's

Codec Response Format

Response [31:0]
Power State [7:0]

Codec Response for NID=01h (Audio Function Group)

Bit	Description
31:11	Reserved. Read as 0s.
10	PS-Settings Reset 0: Setting of widgets has been reset during any low power state 1: The setting were changed from the defaults have been reset to their default during any low power state Read as 1 after single-function-reset in D0/D1/D2/D4. Read as 1 after link-reset in D0/D1/D2/D4. Read as 1 after double-function-reset in D0/D1/D2/D3Clk. The PS-Settings Reset bit will be cleared to zero after Get-Power-State-verb's response.
9	PS-ClkStopOk 0: No capability to operate normally with BITCLK stop 1: Operate properly with no BICLK Read as 1 when PS-Set, Set Power State [1:0]=011b. Read as 0 when PS-Set, Set Power State [1:0]=000b/001b/010b/100b.
8	PS-Error (No Support in ALC231).
7	Reserved, read as 0s.
6:4	PS-Act. Actual Power State [1:0]. 000: Power state is D0 001: Power state is D1 010: Power state is D2 011: Power state is D3 100: Power state is D4 PS-Act indicates the actual power state of the referenced node. For Audio Function Group nodes (NID=01h), PS-Act is always equal to PS-Set. D0: Fully on D1: The lowest possible power consuming state it can return to fully on state (D0) within 10msec, except analog pass through is fully on (Mixer on) D2: The lowest possible power consuming state it can return to fully on state (D0) within 10msec D3: The lowest possible power consuming state under software control D4: The lowest power consumption state
3	Reserved. Read as 0.
2:0	PS-Set, Set Power State [1:0]. 000: Power state is D0 001: Power state is D1 010: Power state is D2 011: Power state is D3 100: Power state is D4 PS-Set controls the current power setting of the referenced node.

Note: Specific blocks will be powered down in each power state. Refer to section 7.5 Power Management, page 22.

Codec Response for other NID

Bit	Description
31:0	Not Supported (Returns 00000000h).

8.16. Verb – Set Power State (Verb ID=705h)

Table 48. Verb – Set Power State (Verb ID=705h)

Set Command Format

Bit [31:28]	Bit [27:20]	Bit [19:8]	Payload Bit [7:0]
Cad=X	Node ID=Xh	Verb ID=705h	Power State [7:0]

Codec Response Format

Response [31:0]
0's for all nodes

'Power State' in Command Bit[7:0]

Bit	Description
7:6	Reserved. Read as 0's.
5:4	PS-Act. Actual Power State [1:0]. 000: Power state is D0 001: Power state is D1 010: Power state is D2 011: Power state is D3 100: Power state is D4 PS-Act indicates the actual power state of the referenced node.
3:2	Reserved. Read as 0's.
1:0	PS-Set. Set Power State [1:0]. 000: Power state is D0 001: Power state is D1 010: Power state is D2 011: Power state is D3 100: Power state is D4

8.17. Verb – Get Converter Stream, Channel (Verb ID=F06h)

Table 49. Verb – Get Converter Stream, Channel (Verb ID=F06h)

Get Command Format

Bit [31:28]	Bit [27:20]	Bit [19:8]	Payload Bit [7:0]
Cad=X	Node ID=Xh	Verb ID=F06h	0's

Codec Response Format

Response [31:0]
Stream & Channel [7:0]

Codec Response for NID=02h, 03h, 06h (Output Converters: LINE-OUT DAC, SURR DAC, SPDIF-OUT).
Codec Response for NID=08h, 09h (Input Converters: ADCs)

Bit	Description
31:8	Reserved. Read as 0's.
7:4	Stream[3:0]. The link stream used by the converter. 0000b is stream 0, 0001b is stream 1, etc.
3:0	Channel[3:0]. The lowest channel used by the converter. A stereo converter will use the set channel n as well as n+1 for its left and right channel.

Codec Response for other NID

Bit	Description
31:0	Not Supported (returns 00000000h).

8.18. Verb – Set Converter Stream, Channel (Verb ID=706h)

Table 50. Verb – Set Converter Stream, Channel (Verb ID=706h)

Set Command Format

Bit [31:28]	Bit [27:20]	Bit [19:8]	Payload Bit [7:0]
Cad=X	Node ID=Xh	Verb ID=706h	Stream & Channel [7:0]

Codec Response Format

Response [31:0]
0's for all nodes

'Stream and Channel' in Command Bit[7:0]

Bit	Description
31:8	Reserved. Read as 0's.
7:4	Set Stream[3:0]. The link stream used by the converter. 0000b is stream 0, 0001b is stream 1, etc.
1:0	Set Channel[3:0]. The lowest channel used by the converter. A stereo converter will use the set channel n as well as n+1 for its left and right channel.

Note: This verb assigns stream and channel for output converters (NID=02h, 03h, 06h) and input converters (NID=08h, 09h). Other widgets will ignore this verb.

8.19. Verb – Get Pin Widget Control (Verb ID=F07h)

Table 51. Verb – Get Pin Widget Control (Verb ID=F07h)

Get Command Format

Bit [31:28]	Bit [27:20]	Bit [19:8]	Payload Bit [7:0]
Cad=X	Node ID=Xh	Verb ID=F07h	0's

Codec Response Format

Response [31:0]
Pin Control [7:0]

Codec Response for pin widget NID=12h, 14h, 17h, 18h~1Bh, 1Dh, 1Eh and 21h. (Pin Complex: DMIC, LINE-OUT, MONO-SPK-OUT, MIC1, MIC2, LINE1, LINE2, PCBEEP, SPDIF_OUT, and HP-OUT).

Bit	Description
31:1	Reserved. Read as 0's.
7	H-Phn Enable (Headphone Amplifier Enable, EN_AMP for an I/O unit). 0: Disabled (Default for NID=1Ah and 21h) 1: Enabled
6	Out Enable (Output Buffet Enable, EN_OBUF for an I/O unit). 0: Disabled (Default for NID=14h, 17h, 18h, 1Ah.1Bh, and 21h) 1: Enabled (Default for NID=1Eh)
5	In Enable (Input Buffer Enable, EN_IBUF for an I/O unit). 0: Disabled (Default for NID=12h) 1: Enabled (Default for NID=18h, 19h, 1Ah, 1Bh, and 1Dh)
4:3	Reserved.
2:0	VrefEn (Vrefout Enable Control). 000b: Hi-Z (Disabled) 001b: 50% of AVDD (2.3V) 010b: Ground 0V 011b: Reserved 100b: 80% of AVDD (3.0V) 101b: 100% of AVDD (4.0V) 110b~111b: Reserved

Codec Response for other NID

Bit	Description
31:0	Not Supported (returns 00000000h).

8.20. Verb – Set Pin Widget Control (Verb ID=707h)

Table 52. Verb – Set Pin Widget Control (Verb ID=707h)

Set Command Format

Bit [31:28]	Bit [27:20]	Bit [19:8]	Payload Bit [7:0]
Cad=X	Node ID=Xh	Verb ID=707h	Pin Control [7:0]

Codec Response Format

Response [31:0]
0's for all nodes

'Pin Control' in command [7:0]: pin widget NID=12h, 14h, 17h, 18h~1Bh, 1Dh, 1Eh and 21h. (Pin Complex: DMIC, LINE-OUT, MONO-SPK-OUT, MIC1, MIC2, LINE1, LINE2, PCBEEP, SPDIF_OUT and HP-OUT).

Bit	Description
31:1	Reserved. Read as 0's.
7	H-Phn Enable. 0: Disabled 1: Enabled
6	Out Enable. 0: Disabled 1: Enabled
5	In Enable (Input Buffer Enable, EN_IBUF for an I/O unit). 0: Disabled 1: Enabled
4:	Reserved.
2:0	VrefEn (Vrefout Enable Control). 000b: Hi-Z (Disabled) 001b: 50% of AVDD 010b: Ground 0V 011b: Reserved 100b: 80% of AVDD 101b: 100% of AVDD 110b~111b: Reserved

8.21. Verb – Get Unsolicited Response Control (Verb ID=F08h)

Determines whether a widget is enabled to send an unsolicited response. An HDA codec can use an unsolicited response to inform software of a real time event.

Table 53. Verb – Get Unsolicited Response Control (Verb ID=F08h)

Get Command Format

Bit [31:28]	Bit [27:20]	Bit [19:8]	Payload Bit [7:0]
Cad=X	Node ID=Xh	Verb ID=F08h	0's

Codec Response Format

Response [31:0]
32-bit Response

Codec Response for NID=01h (GPIO in Audio Function Group), 14h, 18h~1Ah, 1Eh and 21h

Bit	Description
31:8	Reserved. Read as 0's.
7	Unsolicited Response is Enabled. 0: Disabled 1: Enabled
6:4	Reserved. Read as 0's.
3:0	Assigned Tag for Unsolicited Response. The tag[3:0] is assigned by software to determine which widget generates unsolicited responses.

Codec Response for other NID

Bit	Description
31:0	Not Supported (returns 00000000h).

8.22. Verb – Set Unsolicited Response Control (Verb ID=708h)

Enable a widget to generate an unsolicited response.

Table 54. Verb – Set Unsolicited Response Control (Verb ID=708h)

Set Command Format

Bit [31:28]	Bit [27:20]	Bit [19:8]	Payload Bit [7:0]
Cad=X	Node ID=Xh	Verb ID=708h	EnableUnsol [7:0]

Codec Response Format

Response [31:0]
0's for all nodes

'EnableUnsol' in Command Bit[7:0]
For NID=01h (GPIO in Audio Function Group), 14h, 18h~1Ah, 1Eh and 21h

Bit	Description
31:8	Reserved. Read as 0's.
7	Enable Unsolicited Response. 0: Disable 1: Enable
6:4	Reserved. Read as 0's.
3:0	Tag for Unsolicited Response. Tag[3:0] is defined by software to assign a 4-bit tag for nodes that are enabled to generate unsolicited responses.

8.23. Verb – Get Pin Sense (Verb ID=F09h)

Returns the Presence Detect status and the impedance of a device attached to the pin.

Table 55. Verb – Get Pin Sense (Verb ID=F09h)

Get Command Format

Bit [31:28]	Bit [27:20]	Bit [19:8]	Payload Bit [7:0]
Cad=X	Node ID=Xh	Verb ID=F09h	0's

Codec Response Format

Response [31:0]
32-bit Response

Codec Response: Pin widget 14h (LINE-OUT), 18h-1Bh (MIC1, MIC2, LINE1, LINE2), 21h (HP-OUT)

Bit	Description
31	Presence Detect Status. 0: No device is attached to the pin 1: Device is attached to the pin
30:0	Measured Impedance. *Note: The ALC231 does not support impedance sensing. Read as 0's.*

Codec Response for other NID

Bit	Description
31:0	Not Supported (returns 00000000h).

8.24. Verb – Execute Pin Sense (Verb ID=709h)

The ALC231 does not support 'Execute Pin Sense' and will ignore this verb and respond with 0's.

Table 56. Verb – Execute Pin Sense (Verb ID=709h)

Command Format

Bit [31:28]	Bit [27:20]	Bit [19:8]	Payload Bit [7:0]
Cad=X	Node ID=Xh	Verb ID=709h	Right Channel[0]

Codec Response Format

Response [31:0]
0's for all nodes

'Payload' in Command Bit[7:0]

Bit	Description
7:1	Reserved. Read as 0's.
0	Right (Ring) Channel Select. 0: Sense Left channel (Tip) 1: Sense Right channel (Ring)

8.25. Verb – Get Configuration Default (Verb ID=F1Ch)

Reads the 32-bit sticky register for each Pin Widget configured by software.

Table 57. Verb – Get Configuration Default (Verb ID=F1Ch)

Get Command Format

Bit [31:28]	Bit [27:20]	Bit [19:8]	Payload Bit [7:0]
Cad=X	Node ID=Xh	Verb ID=F1Ch	0's

Codec Response Format

Response [31:0]
32-bit Response

Codec Response for Pin Widget: NID=12h (Digital MIC), 14h (LINE-OUT), 21h (HP-OUT), 17h (MONO-SPK-OUT), 18h (MIC1), 19h (MIC2), 1Ah (LINE1), 1Bh (LINE2), 1Dh (PCBEEP), 1Eh (SPDIF-OUT)

Bit	Description
31:0	Configuration information for each pin widget. Default value for each pin widget [31:30]: Port Connectivity [29:24]: Location [23:20]: Default Device [19:16]: Connection Type [15:12]: Color [11:08]: Misc [07:04]: Default Association [03:00]: Sequence

NID 14h	NID 17h	NID 18h	NID 19h	NID 1Ah	NID 1Bh
01014030h	411111F0h	01A19050h	02A19080h	0181305Fh	411111F0h

NID 1Dh	NID 21h	NID 1Eh	NID 12h
411111F0h	411111F0h	01441170h	411111F0h

Note: The 32-bit registers for each Pin Widget are sticky and will not be reset by a LINK Reset or Codec Reset (Function Reset Verb).

Table 58. Default Configuration for Each Pin Widget

	Name	Port	Location	Device	Con Type	Color
NID-14h	FRONT	Jack	Rear	Line Out	1/8" Jack	Green
NID-17h	MONO	No Connection	Other	Other	Other	Other
NID-18h	MIC1	Jack	Rear	Mic In	1/8" Jack	Pink
NID-19h	MIC2	Jack	Front	Mic In	1/8" Jack	Pink
NID-1Ah	LINE1	Jack	Rear	Line In	1/8" Jack	Blue
NID-1Bh	LINE2	No Connection	Other	Other	Other	Other
NID-1Dh	PCBEEP	No Connection	Other	Other	Other	Other
NID-21h	HP-OUT	No Connection	Other	Other	Other	Other
NID-1Eh	SPDIF-OUT	Jack	Rear	SPDIF Out	RCA	Orange
NID-12h	DMIC-1/2	No Connection	Other	Other	Other	Other

8.26. Verb – Set Configuration Default Bytes 0, 1, 2, 3 (Verb ID=71Ch/71Dh/71Eh/71Fh for Bytes 0, 1, 2, 3)

The BIOS can use this verb to figure out the default conditions for the Pin Widgets 14h~1Bh and 1Eh~1Fh such as placement and expected default device.

Table 59. Verb – Set Configuration Default Bytes 0, 1, 2, 3 (Verb ID=71Ch/71Dh/71Eh/71Fh for Bytes 0, 1, 2, 3)

Set Command Format

Bit [31:28]	Bit [27:20]	Bit [19:8]	Payload Bit [7:0]
Cad=X	Node ID=Xh	Verb ID=71Ch, 71Dh, 71Eh, 71Fh	Label [7:0]

Codec Response Format

Response [31:0]
0's for all nodes

Note: Supported by Pin Widget NID=12h (Digital MIC), 14h (LINE-OUT), 21h (HP-OUT), 17h (MONO-SPK-OUT), 18h (MIC1), 19h (MIC2), 1Ah (LINE1), 1Bh (LINE2), 1Dh (PCBEEP), 1Eh (SPDIF-OUT)

Codec Response for All NID

Bit	Description
31:0	0's.

8.27. Verb – Get BEEP Generator (Verb ID=F0Ah)

Table 60. Verb – Get BEEP Generator (Verb ID=F0Ah)

Get Command Format

Bit [31:28]	Bit [27:20]	Bit [19:8]	Payload Bit [7:0]
Cad=X	Node ID=Xh	Verb ID=F0Ah	0's

Codec Response Format

Response [31:0]
Divider [7:0]

'Response' for NID=01h (Audio Function Group)

Bit	Description
31:8	Reserved.
7:0	Frequency Divider, F[7:0]. The internal BEEP frequency is the result of dividing the 48kHz clock by 4 times the number specified in F[7:0]. The lowest tone is 48kHz/(255*4)=47Hz. The highest tone is 48kHz/(1*4)=12kHz. A value of 00h in F[7:0] disables the internal BEEP generator and allows external PCBEEP input.

Codec Response for Other NID

Bit	Description
31:0	0's.

8.28. Verb – Set BEEP Generator (Verb ID=70Ah)

Table 61. Verb – Set BEEP Generator (Verb ID=70Ah)

Set Command Format

Bit [31:28]	Bit [27:20]	Bit [19:8]	Payload Bit [7:0]
Cad=X	Node ID=Xh	Verb ID=70Ah	Divider [7:0]

Codec Response Format

Response [31:0]
0's for all nodes

'Divider' in Set Command

Bit	Description
31:8	Reserved.
7:0	Frequency Divider, F[7:0]. The internal BEEP frequency is the result of dividing the 48kHz clock by 4 times the number specified in F[7:0]. The lowest tone is 48kHz/(255*4)=47Hz. The highest tone is 48kHz/(1*4)=12kHz. A value of 00h in F[7:0] disables the internal BEEP generator and allows external PCBEEP input.

Note: All nodes except Audio Function Group (NID=01h) will ignore this verb.

Codec Response for All NID

Bit	Description
31:0	0's.

8.29. Verb – Get GPIO Data (Verb ID=F15h)

Table 62. Verb – Get GPIO Data (Verb ID=F15h)

Get Command Format

Bit [31:28]	Bit [27:20]	Bit [19:8]	Payload Bit [7:0]
Cad=X	Node ID=01h	Verb ID=F15h	0's

Codec Response Format

Response [31:0]
32-bit Response

Codec Response for NID=01h (Audio Function Group)

Bit	Description
31:8	Reserved.
7:2	GPIO[7:2] Data. Not supported in the ALC231.
1:0	GPIO[1:0] Data. The value written (output) or sensed (input) on the corresponding pin if it is enabled.

Codec Response for Other NID

Bit	Description
31:0	0's.

8.30. Verb – Set GPIO Data (Verb ID=715h)

Table 63. Verb – Set GPIO Data (Verb ID=715h)

Set Command Format

Bit [31:28]	Bit [27:20]	Bit [19:8]	Payload Bit [7:0]
Cad=X	Node ID=01h	Verb ID=715h	Data [7:0]

Codec Response Format

Response [31:0]
0's for all nodes

'Data' in Set command for NID=01h (Audio Function Group)

Bit	Description
31:8	Reserved.
7:2	GPIO[7:2] Output Data. Not supported in the ALC231.
1:0	GPIO[1:0] Output Data. The value written determines the value driven on a pin that is configured as an output pin.

Codec Response for All NID

Bit	Description
31:0	0's.

8.31. Verb – Get GPIO Enable Mask (Verb ID=F16h)

Table 64. Verb – Get GPIO Enable Mask (Verb ID=F16h)

Get Command Format

Bit [31:28]	Bit [27:20]	Bit [19:8]	Payload Bit [7:0]
Cad=X	Node ID=01h	Verb ID=F16h	0's

Codec Response Format

Response [31:0]
EnableMask [7:0]

Codec Response for NID=01h (Audio Function Group)

Bit	Description
31:2	Reserved.
1:0	GPIO[1:0] Enable Mask. 0: The corresponding GPIO pin is disabled and is in Hi-Z state. 1: The corresponding GPIO pin is enabled. Its behavior is determined by the GPIO direction control.

Note: All nodes except Audio Function Group (NID=01h) will ignore this verb.

Codec Response for Other NID

Bit	Description
31:0	0's.

8.32. Verb – Set GPIO Enable Mask (Verb ID=716h)

Table 65. Verb – Set GPIO Enable Mask (Verb ID=716h)

Set Command Format

Bit [31:28]	Bit [27:20]	Bit [19:8]	Payload Bit [7:0]
Cad=X	Node ID=01h	Verb ID=716h	Enable Mask [7:0]

Codec Response Format

Response [31:0]
0's for all nodes

Codec Response for NID=01h (Audio Function Group)

Bit	Description
31:8	Reserved.
7:2	GPIO[7:2] Enable Mask. Not supported in the ALC231.
1:0	GPIO[1:0] Enable Mask. 0: The corresponding GPIO pin is disabled and is in Hi-Z state 1: The corresponding GPIO pin is enabled. It's behavior is determined by the GPIO direction control

Note: All nodes except Audio Function Group (NID=01h) will ignore this verb.

Codec Response for All NID

Bit	Description
31:0	0's.

8.33. Verb – Get GPIO Direction (Verb ID=F17h)

Table 66. Verb – Get GPIO Direction (Verb ID=F17h)

Get Command Format

Bit [31:28]	Bit [27:20]	Bit [19:8]	Payload Bit [7:0]
Cad=X	Node ID=01h	Verb ID=F17h	0's

Codec Response Format

Response [31:0]
Direction [7:0]

Codec Response for NID=01h (Audio Function Group)

Bit	Description
31:8	Reserved.
7:2	GPIO[7:2] Direction Control. Not supported in the ALC231.
1:0	GPIO[1:0] Direction Control. 0: The corresponding GPIO pin is configured as an input 1: The corresponding GPIO pin is configured as an output

Note: All nodes except Audio Function Group (NID=01h) will ignore this verb.

Codec Response for Other NID

Bit	Description
31:0	0's.

8.34. Verb – Set GPIO Direction (Verb ID=717h)

Table 67. Verb – Set GPIO Direction (Verb ID=717h)

Set Command Format

Bit [31:28]	Bit [27:20]	Bit [19:8]	Payload Bit [7:0]
Cad=X	Node ID=01h	Verb ID=717h	Direction [7:0]

Codec Response Format

Response [31:0]
0's for all nodes

Codec Response for NID=01h (Audio Function Group)

Bit	Description
31:8	Reserved.
7:2	GPIO[7:2] Direction Control. Not supported in the ALC231.
1:0	GPIO[1:0] Direction Control. 0: The corresponding GPIO pin is configured as an input 1: The corresponding GPIO pin is configured as an output

Note: All nodes except Audio Function Group (NID=01h) will ignore this verb.

Codec Response for Other NID

Bit	Description
31:0	0's.

8.35. Verb – Get GPIO Wake Enable Mask(Verb ID=F18h)

Table 68. Verb – Get GPIO Wake Enable Mask (Verb ID=F18h)

Get Command Format

Bit [31:28]	Bit [27:20]	Bit [19:8]	Payload Bit [7:0]
Cad=X	Node ID=01h	Verb ID=F18h	0's

Codec Response Format

Response [31:0]
WakeEnalbeMask [7:0]

Codec Response for NID=01h (Audio Function Group)

Bit	Description
31:8	Reserved.
7:2	GPIO[7:2] Wake Enable Mask. Not supported in the ALC231.
1:0	GPIO[1:0] Wake Enable Mask. 0: The corresponding GPIO pin will not generate a wake-up event 1: The corresponding GPIO pin will generate a wake-up event

Note: All nodes except Audio Function Group (NID=01h) will ignore this verb.

Codec Response for Other NID

Bit	Description
31:0	0's.

8.36. Verb – Set GPIO Wake Enable Mask (Verb ID=718h)

Table 69. Verb – Set GPIO Wake Enable Mask (Verb ID=718h)

Set Command Format

Bit [31:28]	Bit [27:20]	Bit [19:8]	Payload Bit [7:0]
Cad=X	Node ID=01h	Verb ID=718h	WakeEnalbeMask [7:0]

Codec Response Format

Response [31:0]
0's for all nodes

Codec Response for NID=01h (Audio Function Group)

Bit	Description
31:8	Reserved.
7:2	GPIO[7:2] Wake Enable Mask. Not supported in the ALC231
1:0	GPIO[1:0] Wake Enable Mask. 0: The corresponding GPIO pin will not generate a wake-up event 1: The corresponding GPIO pin will generate a wake-up event

Note 1: All nodes except the Audio Function Group (NID=01h) will ignore this verb.

Codec Response for Other NID

Bit	Description
31:0	0's.

8.37. Verb – Get GPIO Unsolicited Response Enable Mask (Verb ID=F19h)

Table 70. Verb – Get GPIO Unsolicited Response Enable Mask (Verb ID=F19h)

Get Command Format

Bit [31:28]	Bit [27:20]	Bit [19:8]	Payload Bit [7:0]
Cad=X	Node ID=01h	Verb ID=F19h	0's

Codec Response Format

Response [31:0]
UnsolEnable [7:0]

Codec Response for NID=01h (Audio Function Group)

Bit	Description
31:8	Reserved.
7:2	GPIO[7:2] Unsolicited Enable Mask. Not supported in the ALC231.
1:0	GPIO[1:0] Unsolicited Enable Mask. 0: Unsolicited response will not be sent on link 1: Unsolicited response will be sent on link when state of corresponding GPIO has been changed

Note: All nodes except Audio Function Group (NID=01h) will ignore this verb.

Codec Response for Other NID

Bit	Description
31:0	0's.

8.38. Verb – Set GPIO Unsolicited Response Enable Mask (Verb ID=719h)

Table 71. Verb – Set GPIO Unsolicited Response Enable Mask (Verb ID=719h)

Set Command Format

Bit [31:28]	Bit [27:20]	Bit [19:8]	Payload Bit [7:0]
Cad=X	Node ID=01h	Verb ID=719h	UnsolEnable [7:0]

Codec Response Format

Response [31:0]
0's for all nodes

Codec Response for NID=01h (Audio Function Group)

Bit	Description
31:8	Reserved.
7:2	GPIO[7:2] Unsolicited Enable Mask. Not supported in the ALC231
1:0	GPIO[1:0] Unsolicited Enable Mask. 0: Unsolicited response will not be sent on link 1: Unsolicited response will be sent on link when state of corresponding GPIO has been changed

Note 1: All nodes except the Audio Function Group (NID=01h) will ignore this verb.

Note 2: The unsolicited response of corresponding GPIO is enabled when it's 'Enable Mask' and Verb-'Unsolicited Response' for NID=01h are enabled.

Codec Response for Other NID

Bit	Description
31:0	0's.

8.39. Verb – Function Reset (Verb ID=7FFh)

Table 72. Verb – Function Reset (Verb ID=7FFh)

Command Format (NID=01H)

Bit [31:28]	Bit [27:20]	Bit [19:8]	Payload Bit [7:0]
Cad=X	Node ID=01h	Verb ID=7FFh	0's

Codec Response Format

Response [31:0]
0's

Codec Response

Bit	Description
31:0	Reserved. Read as 0's.

Note: The Function Reset command causes all widgets in the ALC231 to return to their power-on default state.

8.40. Verb – Get Digital Converter Control 1 & Control 2 (Verb ID=F0Dh, F0Eh)

Table 73. Verb –Get Digital Converter Control 1 & Control 2 (Verb ID=F0Dh, F0Eh)

Get Command Format

Bit [31:28]	Bit [27:20]	Bit [19:8]	Payload Bit [7:0]
Cad=X	Node ID=Xh	Verb ID=F0Dh/F0Eh	0's

Codec Response Format

Response [31:0]
Bit[31:0] are SIC bit

NID=06h (SPDIF-OUT) Response to 'Get verb' – F0Dh (Control 1 for SIC bit[15:0]).
NID=06h (SPDIF-OUT) Response to 'Get verb' – F0Eh (Control 2 for SIC bit[31:16])

Bit	Description – SIC (SPDIF IEC Control) Bit[31:0]
31:24	Read as 0's.
23	Keep Alive Enable 0: Disable SPDIF Out would be disable in D2/D3/D4 mode 1: Enable SPDIEF Out would be keep alive in D0/D1/D2/D3, but not D4.
12:15	Reserved. Read as 0's.
14:8	CC[6:0] (Category Code).
7	LEVEL (Generation Level).
6	PRO (Professional or Consumer Format). 0: Consumer format 1: Professional format
5	/AUDIO (Non-Audio Data type). 0: PCM data 1: AC3 or other digital non-audio data
4	COPY (Copyright). 0: Asserted 1: Not asserted
3	PRE (Pre-Emphasis). 0: None 1: Filter pre-emphasis is 50/15 microseconds
2	VCFG for Validity Control (control V bit and data in Sub-Frame).
1	V for Validity Control (control V bit and data in Sub-Frame).
0	Digital Enable. DigEn. 0: OFF 1: ON

Codec Response for Other NID

Bit	Description
31:0	0's.

8.41. Verb – Set Digital Converter Control 1 & Control 2 (Verb ID=70Dh, 70Eh)

Table 74. Verb – Set Digital Converter Control 1 & Control 2 (Verb ID=70Dh, 70Eh)

Set Command Format (Verb ID=70Dh, Set Control 1)

Bit [31:28]	Bit [27:20]	Bit [19:8]	Payload Bit [7:0]
Cad=X	Node ID=Xh	Verb ID=70Dh	SIC [7:0]

Codec Response Format

Response [31:0]
0's

Set Command Format (Verb ID=70Eh, Set Control 2)

Bit [31:28]	Bit [27:20]	Bit [19:8]	Payload Bit [7:0]
Cad=X	Node ID=Xh	Verb ID=70Eh	SIC [15:8]

Codec Response Format

Response [31:0]
0's

'Payload' in Set Control 1 for NID=06h (SPDIF-OUT)

Bit	Description – SIC (SPDIF IEC Control) Bit[7:0]
7	LEVEL (Generation Level).
6	PRO (Professional or Consumer Format). 0: Consumer format 1: Professional format
5	/AUDIO (Non-Audio Data Type). 0: PCM data 1: AC3 or other digital non-audio data
4	COPY (Copyright). 0: Asserted 1: Not asserted
3	PRE (Pre-Emphasis). 0: None 1: Filter pre-emphasis is 50/15 microseconds
2	VCFG for Validity Control (control V bit and data in Sub-Frame).
1	V for Validity Control (control V bit and data in Sub-Frame).
0	Digital Enable. DigEn. 0: OFF 1: ON

'Payload' in Set Control 2 for NID=06h (SPDIF-OUT)

Bit	Description – SIC (SPDIF IEC Control) Bit[7:0]
7	Reserved. Read as 0's.
6:0	CC[6:0] (Category Code).

8.42. Verb – Get Subsystem ID [31:0] (Verb ID=F20h/F21h/F22h/F23h)

32-bit Read/Write register for Audio Function Group (NID=01h)

Table 75. Verb – Get Subsystem ID [31:0] (Verb ID=F20h/F21h/F22h/F23h)

Get Command Format

Bit [31:28]	Bit [27:20]	Bit [19:8]	Payload Bit [7:0]
CAd = X	Node ID=01h	Verb ID=F20h	0s

Codec Response Format

Response [31:0]
32-bit Response

Codec Response for NID=01h

Bit	Description
31:16	Subsystem ID[23:8] (Default=10ECh).
15:8	Subsystem ID[7:0] (Default=02h).
7:0	Assembly ID[7:0] (Default=21h).

8.43. Verb – Set Subsystem ID [31:0] (Verb ID=723h for [31:24], 722h for [23:16], 721h for [15:8], 720h for [7:0])

Table 76. Verb – Set Subsystem ID [31:0] (Verb ID=723h for [31:24], 722h for [23:16], 721h for [15:8], 720h for [7:0])

Set Command Format

Bit [31:28]	Bit [27:20]	Bit [19:8]	Payload Bit [7:0]
CAd = X	Node ID=01h	Verb ID=723h, 722h, 721h, 720h	Label [7:0]

Codec Response Format

Response [31:0]
0s for All Nodes

Codec Response for all NID

Bit	Description
31:0	0s.

8.44. Verb – Get EAPD Control (Verb ID=F0Ch for Get)

Table 77. Verb – Get EAPD Control (Verb ID=F0Ch)

Get Command Format (NID=14h, 15h and 21h)

Bit [31:28]	Bit [27:20]	Bit [19:8]	Payload Bit [7:0]
CAd=X	Node ID=14h/17h/21h	Verb ID=F0Ch	0s

Codec Response Format

Response [31:0]
Bit[1] is EAPD Control

Codec response in Get Command for NID=14h (LINE-OUT), 17h (MONO-SPK-OUT), and 21h (HP-OUT)

Bit	Description
31:3	Reserved.
2	L-R Swap. The ALC231 does not support swapping left and right channels. Read as 0.
1	EAPD Value. 0: EAPD pin state is low 1: EAPD pin state is high
0	Bridge Tied Load (BTL) Enable. The ALC231 does not support BTL output. Read as 0.

Codec Response in for Other NID

Bit	Description
31:0	0's.

8.45. Verb – Set EAPD Control (Verb ID=70Ch for Set)

Table 78. Verb – Set EAPD Control (Verb ID=70Ch for Set)

Set Command Format (NID=14h, 15h and 21h)

Bit [31:28]	Bit [27:20]	Bit [19:8]	Payload Bit [7:0]
CAd=X	Node ID=14h/17h/21h	Verb ID=70Ch	Bit[1] is EAPD Control

Codec Response Format

Response [31:0]
0s

Payload in Set Command for NID=14h (LINE-OUT), 17h (MONO-SPK-OUT), and 21h (HP-OUT)

Bit	Description
7:3	Reserved. Written Data is Ignored.
2	L-R Swap. The ALC231 does not support swapping left and right channels, written data is ignored.
1	EAPD Value. 0: EAPD pin state is low 1: EAPD pin state is high
0	Bridge Tied Load (BTL) Enable. The ALC231 does not support BTL output. Written data is ignored.

Codec Response

Bit	Description
31:0	0's.

9. Electrical Characteristics

9.1. DC Characteristics

9.1.1. Absolute Maximum Ratings

Table 79. Absolute Maximum Ratings

Parameter	Symbol	Minimum	Typical	Maximum	Units
Power Supplies					
Digital Power for Core	DVDD	3.0	3.3	3.6	V
Digital Power for Link*1	DVDD-IO	1.5	3.3	3.6	V
Analog Power	AVDD1, AVDD2	4.5	5.0	5.5	V
BTL Analog Power	PVDD	4.5	5.0	5.5	V
Ambient Operating Temperature	Ta	0	-	+70	°C
Storage Temperature	Ts	-	-	+125	°C
ESD (Electrostatic Discharge)					
	Susceptibility Voltage				
All Pins	3500V				

Note: DVDD-IO must be lower than DVDD.

9.1.2. Threshold Voltage

DVDD-IO=3.3V±5%, $T_{ambient}$=25°C, with 50pF external load.

Table 80. Threshold Voltage

Parameter	Symbol	Minimum	Typical	Maximum	Units
Input Voltage Range	V_{IN}	-0.30	-	DVDD+0.30	V
Low Level Input Voltage (BCLK, RST#, SDO, SYNC, SDI)	V_{IL}	-	-	0.30*DVDDIO	V
High Level Input Voltage (BCLK, RST#, SDO, SYNC, SDI)	V_{IH}	0.65*DVDDIO	-	-	V
Low Level Input Voltage (GPIOs)	V_{IL}	-	(2/3)*DVDD	-	V
High Level Input Voltage (GPIOs)	V_{IH}	-	(2/3)*DVDD	-	V
High Level Output Voltage	V_{OH}	0.9*DVDD	-	-	V
Low Level Output Voltage	V_{OL}	-	-	0.1*DVDD	V
Input Leakage Current	-	-10	-	10	µA
Output Leakage Current (Hi-Z)	-	-10	-	10	µA
Output Buffer Drive Current	-	-	5	-	mA
Internal Pull Up Resistance	-	-	47k	-	Ω

9.1.3. Digital Filter Characteristics

Table 81. Digital Filter Characteristics

Filter	Symbol	Minimum	Typical	Maximum	Units
ADC Low Pass Filter	Passband	0	-	0.454*Fs (-1dB)	kHz
	Stopband	28.8	-	-	kHz
	Stopband Rejection	-	-76.0	-	dB
	Passband Ripple	-	±0.05	-	dB
DAC Low Pass Filter	Passband	0	-	0.454*Fs (-1dB)	kHz
	Stopband	28.8	-	-	kHz
	Stopband Rejection	-	-78.5	-	dB
	Passband Ripple	-	±0.05	-	dB

9.1.4. SPDIF Output Characteristics

DVDD=3.3V, $T_{ambient}$=25°C, with 75Ω external load.

Table 82. SPDIF Output Characteristics

Parameter	Symbol	Minimum	Typical	Maximum	Units
SPDIF-OUT High Level Output	V_{OH}	3.0	3.3	-	V
SPDIF-OUT Low Level Output	V_{OL}	-	0	0.3	V

9.2. AC Characteristics

9.2.1. Link Reset and Initialization Timing

Table 83. Link Reset and Initialization Timing

Parameter	Symbol	Minimum	Typical	Maximum	Units
RESET# Active Low Pulse Width	T_{RST}	100.167	-	-	µs
RESET# Inactive to BCLK Startup Delay for PLL Ready Time	T_{PLL}	100	-	-	µs
SDI Initialization Request	T_{FRAME}	-	-	25	Frame Time

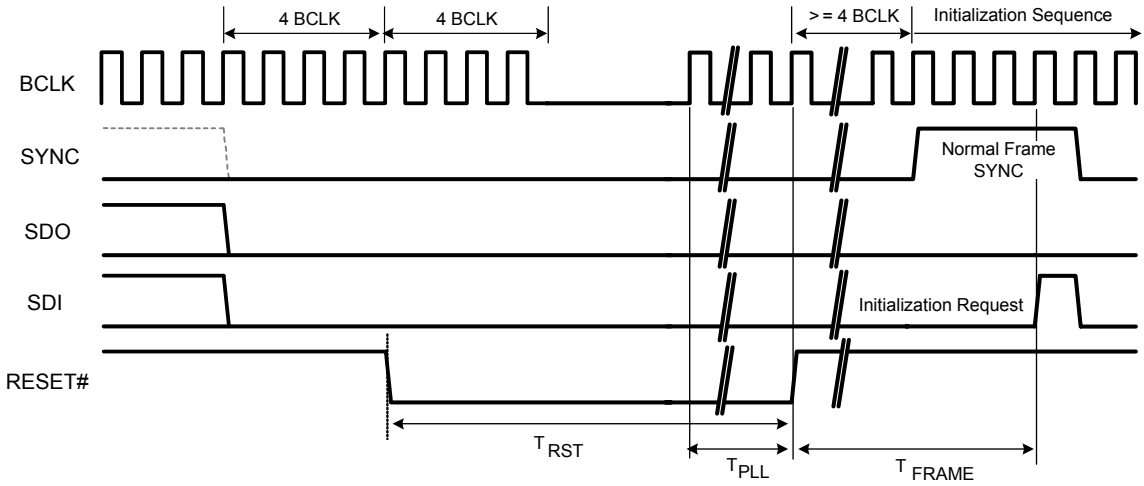

Figure 13. Link Reset and Initialization Timing

9.2.2. Link Timing Parameters at the Codec

Table 84. Link Timing Parameters at the Codec

Parameter	Symbol	Minimum	Typical	Maximum	Units
BCLK Frequency	-	23.9976	24.0	24.0024	MHz
BCLK Period	T_{cycle}	41.163	41.67	42.171	ns
BCLK Jitter	T_{jitter}	-	150	500	ns
BCLK High Pulse Width	T_{high}	17.5	-	24.16	ns (%)
BCLK Low Pulse Width	T_{low}	17.5	-	24.16	ns (%)
SDO Setup Time at Both Rising and Falling Edge of BCLK	T_{setup}	5	-	-	ns
SDO Hold Time at Both Rising and Falling Edge of BCLK	T_{hold}	5	-	-	ns
SDI Valid Time After Rising Edge of BCLK (1:50pF external load)	T_{tco}	3		11.0	ns
SDI Flight Time	T_{flight}	0		7	ns

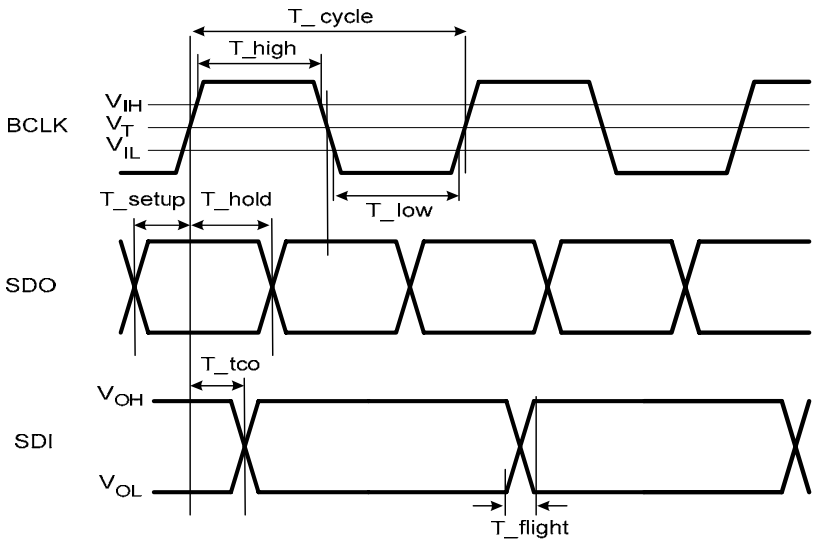

Figure 14. Link Signals Timing

9.2.3. SPDIF Output Timing

Table 85. SPDIF Output Timing

Parameter	Symbol	Minimum	Typical	Maximum	Units
SPDIF-OUT Frequency*1	-	-	3.072	-	MHz
SPDIF-OUT Period*1	T_{cycle}	-	325.6	-	ns
SPDIF-OUT Jitter	T_{jitter}	-	-	4	ns
SPDIF-OUT High Level Width*1	T_{High}	156.2 (48%)	162.8 (50%)	169.2 (52%)	ns (%)
SPDIF-OUT Low Level Width*1	T_{Low}	156.2 (48%)	162.8 (50%)	169.2 (52%)	ns (%)
SPDIF-OUT Rising Time	T_{rise}	-	2.0	-	ns
SPDIF-OUT Falling Time	T_{fall}	-	2.0	-	ns

**1: Bit parameters for 48kHz sample rate of SPDIF-OUT.*

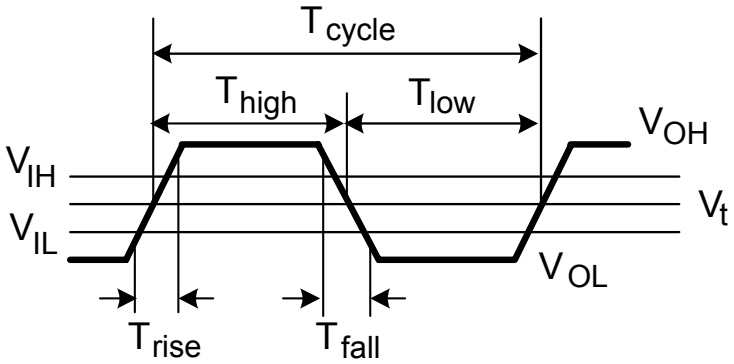

Figure 15. Output Timing

9.3. Analog Performance

Standard Test Conditions

- $T_{ambient}$=25°C, DVDD-CORE=3.3V ±5%, AVDD=5.0V±5%
- 1kHz input sine wave; Sampling frequency=48kHz; 0dB=1Vrms
- 10KΩ/50pF load; Test bench Characterization BW:10Hz~22kHz

Table 86. Analog Performance

Parameter	Min	Typical	Max	Units
Full-Scale Input Voltage				
All ADC (Gain=0dB)	-	1.3	-	Vrms
Full-Scale Output Voltage				
All DAC (Gain=0dB)	-	1.2	-	Vrms
Dynamic Range with 1kHz Tone, DR (A Weighted)				
ADC	-	90	-	dB FSA
DAC	-	97	-	dB FSA
Headphone Out @32Ω Load	-	97	-	dB FSA
Total Harmonic Distortion Plus Noise, THD+N				
ADC	-	-80	-	dB FS
DAC	-	-92	-	dB FS
Headphone Out @32Ω Load	-	-80	-	dB FS
Frequency Response				
ADC (-3dB lower edge, -1dB higher edge)	10	-	0.454*Fs	Hz
DAC (-3dB lower edge, -1dB higher edge)	10	-	0.454*Fs	Hz
Power Supply Rejection Ratio	-	-60	-	dB
Total Out-of-Band Noise (28.8kHz~100kHz)	-	-60	-	dB
Amplifier Gain Step				
ADC	-	1.5	-	dB
DAC	-	0.75	-	dB
Crosstalk Between Input Channels	-	-80	-	dB
Input Impedance (Gain=0dB)	-	47	-	KΩ
Output Impedance				
Amplified Output	-	1	-	Ω
Non-Amplified Output	-	200	-	Ω
Digital Power Supply Current (Normal Operation) DVDD=3.3V, DVDD-IO=3.3V	-		35	mA
Digital Power Supply Current (Power Down Mode) DVDD=3.3V, DVDD-IO=3.3V	-		100	µA
Analog Power Supply Current (Normal Operation) AVDD1, AVDD2=5.0V	-		68	mA
Analog Power Supply Current (Power Down Mode) AVDD1, AVDD2=5.0V	-		<1	mA
VREFOUTx Output Voltage	0	2.50	3.75	V
VREFOUTx Output Current	-	5	-	mA

Note: FSA=Full-Scale with A-weighting filter. *FS=Full-Scale.*

9.4. Class-D Power Amplifier Performance

Table 87. Class-D Power Amplifier Performance

Parameter	Min	Typical	Max	Units
Maximum Output Peak Current @ BTL Mode	-	1.3	-	A
Maximum Output Power (THD+N=1%, 4Ω Load, PVDD=5V) Maximum Output Power (THD+N=1%, 8Ω Load, PVDD=5V)	- -	2.2 1.3	- -	W W
Power Efficiency η @ BTL Mode into 4ohm	-	80	-	%
Power Efficiency η @ BTL Mode into 4ohm with Filter	-	84	-	%
Power Efficiency η @ BTL Mode into 8ohm	-	88	-	%
Power Efficiency η @ BTL Mode into 8ohm with Filter	-	92	-	%
Full-Scale Output Voltage @ BTL Mode PCM/PWM Converter	-	+/-4.34	-	Vpeak
S/N (A weighted) @ BTL Mode PCM/PWM Converter	-	100	-	dB FSA
THD+N @ BTL Mode at test signal around 20Hz~22KHz PCM/PWM Converter	-	-60	-	dB FS
Frequency Response @ BTL Mode PCM/PWM Converter	20	-	20K	Hz
Total Quiescent Current (Iq)	-	1.25	-	nA
P-Type MOS Output Impendence (Rds)	-	150	-	mΩ
N-Type MOS Output Impendence (Rds)	-	250	-	mΩ
PWM Frequency	-	400K	-	Hz
Dead Time (Shoot)	-	0	-	Ns
Modulation Index	-	0.8896	-	N/A
Minimum Pulse Width	-	150	-	ns
QFN-48 Package Thermal Characteristic, Θ_{JA}	-	32.4	-	°C/W
Output Voltage Noise(Vn) at Mute Condition	-	50	-	µV
Output Short Circuit Protection Limit	-	2.5	-	A
Class-D Output RMS Current, I_L (BTL 4Ω Load, PVDD = 5.0V, Full Power Output)	-	0.6	-	A
Class-D Output RMS Current, I_L (BTL 4Ω Load, PVDD = 5.0V, Power Down)	-	0	-	mA

10. Application Circuits

To get the best compatibility in hardware design and software driver, any modification should be confirmed with Realtek. Realtek may update the latest application circuits onto our web site (www.realtek.com) without modifying this datasheet.

10.1. Filter Connection

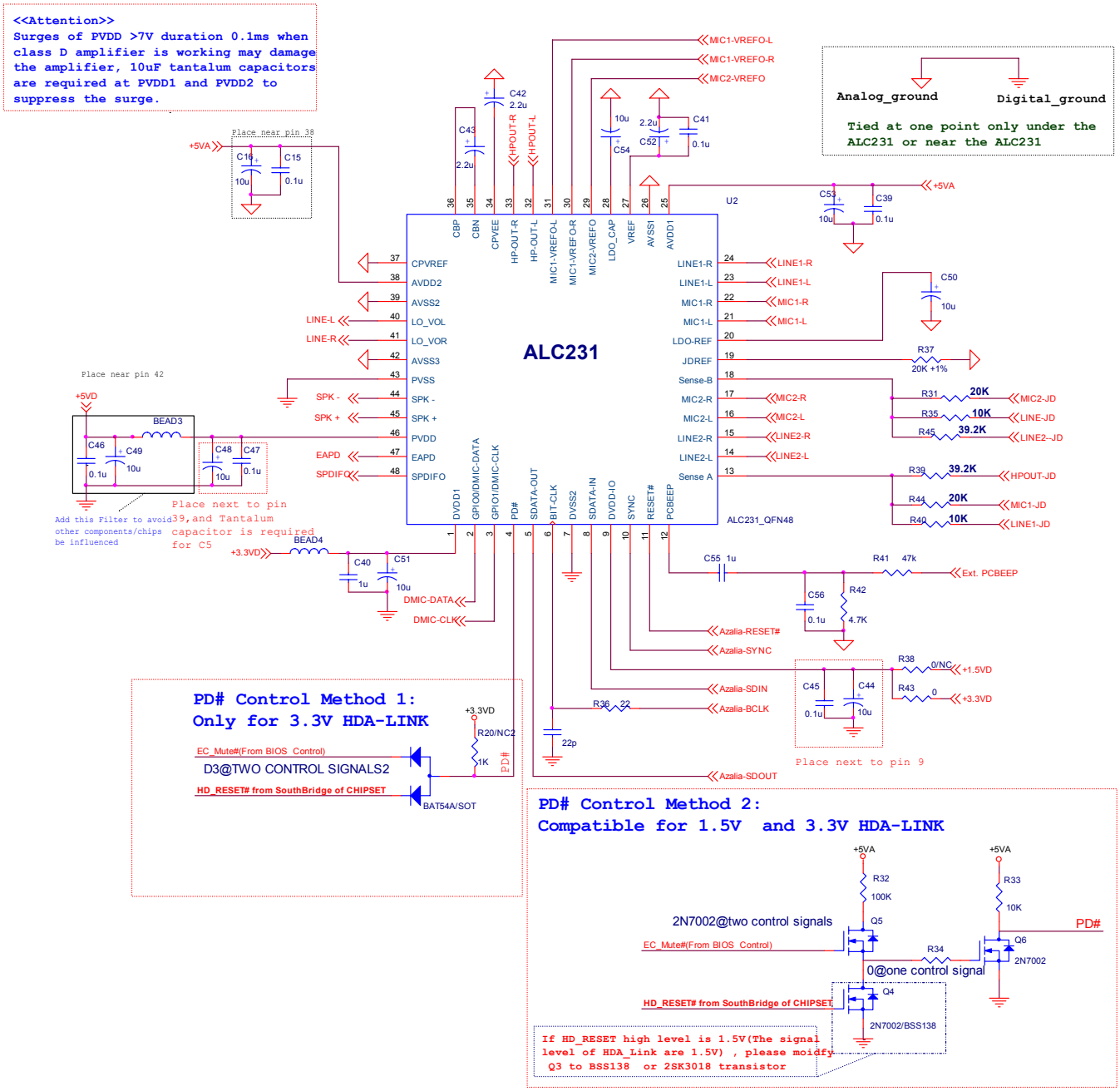

Figure 16. Filter Connection

10.2. Power and Jack Connection

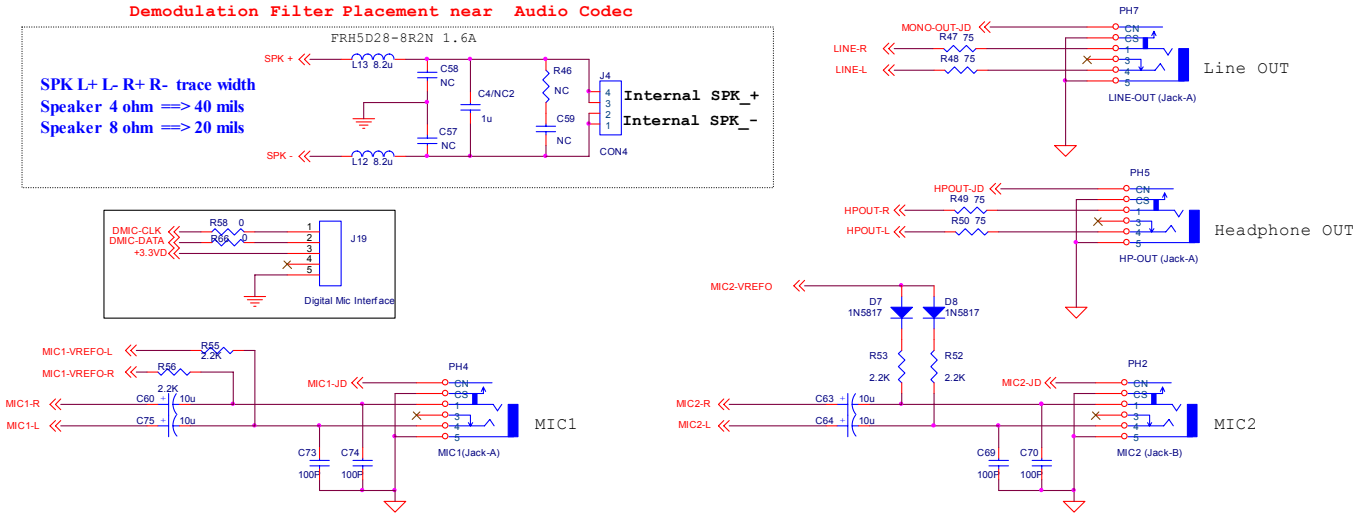

Figure 17. Power and Jack Connection

10.3. SPDIF-OUT Connection

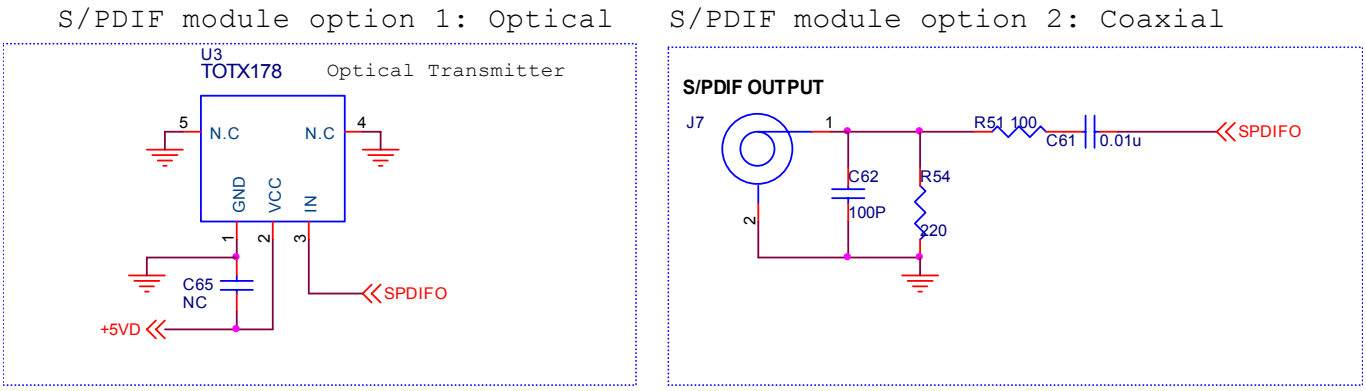

Figure 18. SPDIF-OUT Connection

11. Mechanical Dimensions

Plastic Quad Flat No-Lead Package 48 Leads 7x7mm Outline.

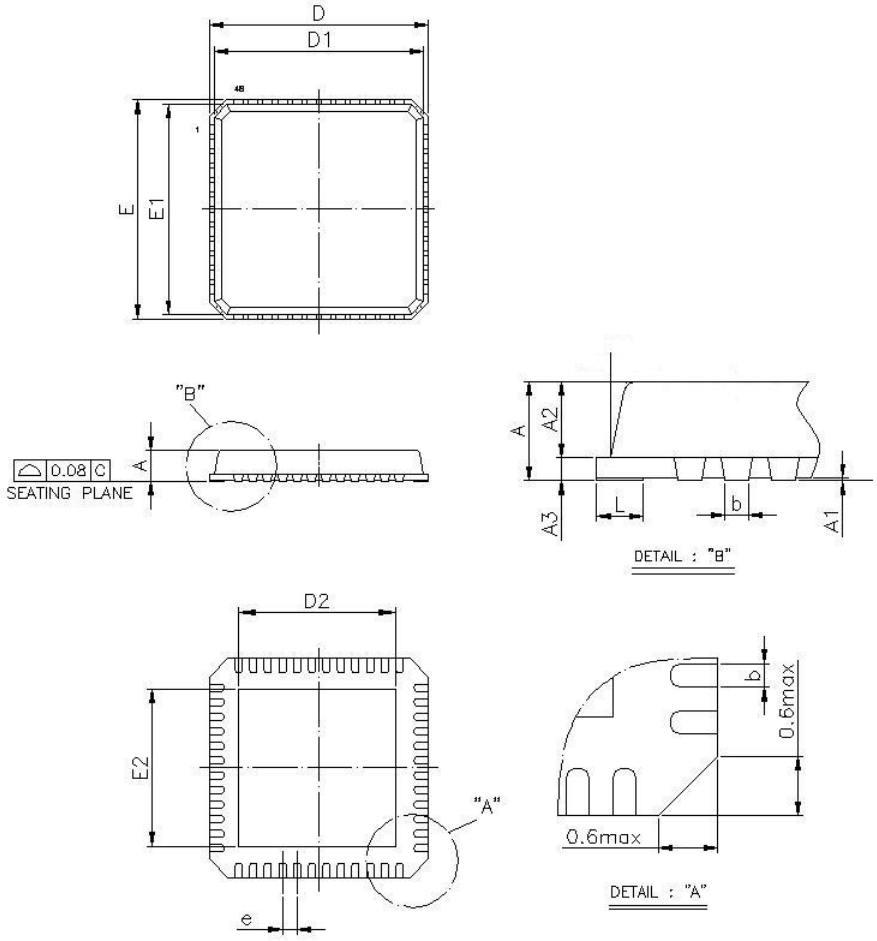

Symbol	Dimension in mm			Dimension in inch		
	Min	Nom	Max	Min	Nom	Max
A	0.75	0.85	1.00	0.030	0.034	0.039
A1	0.00	0.02	0.05	0.000	0.001	0.002
A2	0.55	0.65	0.80	0.022	0.026	0.032
A3	0.20REF			0.008REF		
b	0.18	0.25	0.30	0.007	0.010	0.012
D/E	7.00BSC			0.276BSC		
D_1/E_1	6.75BSC			0.266BSC		
D2/E2	5.20	5.45	5.70	0.205	0.215	0.225
e	0.50BSC			0.020BSC		
L	0.30	0.40	0.50	0.012	0.016	0.020

Note 1: CONTROLLING DIMENSION: MILLIMETER (mm).
Note 2: REFERENCE DOCUMENT: JEDEC MO-220.

12. Ordering Information

Table 88. Ordering Information

Part Number	Description	Status
ALC231-CG	QFN-48 'Green' Package	Production

Note: See page 8 for 'Green' package and version identification.

Realtek Semiconductor Corp.
Headquarters
No. 2, Innovation Road II
Hsinchu Science Park, Hsinchu 300, Taiwan
Tel.: +886-3-578-0211. Fax: +886-3-577-6047
www.realtek.com